A California Solar Initiative (CSI) Research, Development, Demonstration, and Deployment Program Grant

Task 4.1 Deliverable:
Report on Installation and Integration of VPower™ into the UCSD System

Final submitted June 27, 2011

Grant Title:
Innovative Business Models, Rates and Incentives that Promote Integration of High Penetration PV with Real-Time Management of Customer Sited Distributed Energy Resources.

Prepared by:

Charles Richter
Project Engineer

Principle Investigator:

Rick Schaal
Managing Director – Projects

Nancy Miller
Sr. Project Manager

Viridity Energy Inc.

© 2011 Viridity Energy, Inc. All Rights Reserved

Definitions and Abbreviations

Name or Abbreviation	Definition
Ancillary services	In the electric energy industry, electric energy (MWs) is the primary product. In contrast, an ancillary service is something that supports the transmission of electricity from its generation site to the customer, e.g., regulation, spinning reserve, non-spinning reserve, replacement reserve and voltage support.
BMS	Building Management System
CAISO	California Independent system operator
Chiller	A component of HVAC systems, the chiller can remove heat energy from a medium (such as water), to be used in cooling buildings, water, etc. Some of the chillers at UCSD are be driven by electricity and some by steam.
CSI	California Solar Initiative
DA	Day Ahead. Many energy markets are cleared in the day prior to the day of operations.
Electric Storage	A battery for storing electrical energy.
Fuel Cell	A device that generates electricity through chemical processes, in some ways similar to a battery, but uses an external fuel source.
HVAC	Heating Ventilation and Air Conditioning.
LMP	Locational Marginal Price. Electric energy prices enhanced to show the value of energy based on transmission congestion impacts.
MW	Megawatt. A unit of electric power. MWh is a Megawatt-hour a measure of electric energy.
PV	Photovoltaic electrical generation (A solar panel).
RT	Real Time. Many energy markets have a clearing near to real time using very short term load forecasts to predict the amount of generation and load to be on the electrical grid.
Thermal Storage	Maintaining or modeling the quantity of thermal energy in some medium for later use. The storage could be accomplished by cooling or heating. The medium could be water, ice, building construction materials, etc.
UCSD	University of California at San Diego

History of VPower™ at UCSD

In 2010, Viridity Energy proposed using its VPower™ solution at the UCSD microgrid as part of the Renewable Energy Secure Communities (RESCO) Project and to extend UCSD's desire to develop a comprehensive and sustainable microgrid. In the fall of 2010, site-surveys were conducted that gathered information which supported the resource modeling. Viridity and EDSA/Power Analytics worked to integrate their software solutions to leverage their existing and complementary functionality. In January of 2011, the first delivery of the VPower™(Viridity Energy Inc.) and Paladin™ SmartGrid® (Power Analytics Corporation) solution was installed on UCSD servers at the Rimac Supercomputer Center. VPower is currently used by UCSD operators

© 2011 Viridity Energy, Inc. All Rights Reserved

as a view-only tool with suggested manual actions and no direct interaction with the California Independent System Operator (CAISO) energy market.

In May an enhanced version of VPower with improved modeling of steam and chilled water was installed at UCSD.

Background

VPower™: VPower is Viridity Energy's advanced software and hardware solution that leverages customer's distributed energy resources, energy storage systems and controllable loads to achieve maximum economic value. VPower's optimization and scheduling software accurately models customer resources. VPower determines how best to meet demand electric and thermal (e.g., heating, chilling) obligations and identifies and enhances additional resource capability (e.g., participation in wholesale energy and ancillary services markets).

UCSD: UC San Diego operates a 42 MW micro grid with a widely diverse portfolio of distributed energy resources. With a daily population of over 45,000, UC San Diego is the size and complexity of a small city. The campus self generates 82% of annual demand, using such resources as 30 MW of Natural Gas Cogeneration, 2.8 MW of Fuel Cells, about 3 MW of Photovoltaic Solar panels. The campus is a leader in green energy, and will soon be providing electric charging stations for public and university owned electric vehicles, such as the Nissan Leaf.

VPower™ at UCSD: At UCSD, VPower was installed and integrated with Paladin™ SmartGrid®, a power analytics software package created by Power Analytics Corporation (aka EDSA). Together VPower and Paladin co-optimize the campus resources to meet electrical and thermal (e.g., steam, chilled water, hot water) requirements. VPower models traditional electrical generation, combined heat and power plant cogeneration, renewable solar generation, and HVAC systems including building management systems (BMS) and controls, chillers, and heat exchangers. Combined with price data, weather forecasts, and real-time and historical data from UCSD's PI System® (OSIsoft) servers, VPower determines the optimal daily schedule of the resources. Paladin analyzes the schedules taking into account static and dynamic voltage stability constraints on the microgrid. The integrated system produces resource schedules that reduce costs, help lower emissions like carbon, and maintain a reliable and controllable microgrid.

Why Install VPower™ at UCSD? The size of a small city, the UCSD micro grid includes a variety of distributed resources. The operation of the distributed resources can often involve advanced decision analyses in balancing operational constraints, costs and impacts to the environment. VPower provides the capability to analyze the value of UCSD's traditional electric generation, steam production, thermal energy storage, solar energy, electric vehicle fleet, and building management and control systems in meeting electrical and thermal demands. VPower's schedules can reduce peak demand through load shifting, and increase reliability by pairing flexible storage systems with resources that may be intermittent (e.g., solar generation during cloud-cover).

VPower includes support for demand response events, and for offering resources into the wholesale energy market, will provide the university with a test-bed for the future when their

© 2011 Viridity Energy, Inc. All Rights Reserved

distributed energy resources may be offered into the market and/or utilized to aid in distribution system reliability.

To support the UCSD resource analysis, during the CSI project, VPower was extended with modules to download and process both locational marginal prices from the real-time and day ahead energy markets.

Installation of VPower

Identification and Modeling of Resources

Resources (mostly on campus) were identified to be modeled within VPower. These devices were compared to the resource type library within VPower. See table.

Table 1. UCSD Resources Modeled in VPower.

Name	Type
PADR Supply Contract	Supply Contract
PV-1_At_XFMR-336	Solar Generator
PV-2_Campus_Services	Solar Generator
PV-3_Price_Center	Solar Generator
PV-4_Gilman_Parking	Solar Generator
PV-5_Powell_Lab	Solar Generator
PV-6_Hopkins_Parking	Solar Generator
PV-7_School_of_Management	Solar Generator
PV-1MW	Solar Generator
Boiler_Steam	Generator
GT1_COGEN_Steam	Generator
GT2_COGEN_Steam	Generator
GT1_COGEN_Electric	Generator
GT2_COGEN_Electric	Generator
Steam_Turbine_ST1	Generator
GEN-DIESEL4kV-1	Generator
GEN-DIESEL4kV-2	Generator
GEN-DIESEL4kV-3	Generator
GEN-DIESEL-1	Generator
GEN-DIESEL-2	Generator
Fuel_Cell_1_LE	Generator
SUB-1A_Chiller_1	Chiller
SUB-1A_Chiller_2	Chiller
XFMR-233__Chiller_5_(WC5)	Chiller
XFMR-233__Chiller_7_(WC7)	Chiller
XFMR-TA___Chiller_3_(WC3)	Chiller
XFMR-TA___Chiller_6_(WC6)	Chiller
XFMR-US9_Chiller_9_(WC9)	Chiller
WC-1_Steam_Chiller	Chiller
WC-2_Steam_Chiller	Chiller
WC-3_Steam_Chiller	Chiller

© 2011 Viridity Energy, Inc. All Rights Reserved

Heat_Exchanger	Generator
EV_Rapid_Charge_Station_Public	Electric Storage
EV_Slow_Charge_Station_Public	Electric Storage
EV_Rapid_Charge_Station_UCSD	Electric Storage
EV_Slow_Charge_Station_UCSD	Electric Storage
EV_Rapid_Charge_Station_Buses	Electric Storage
EV_Slow_Charge_Station_Buses	Electric Storage
Energy_Storage_7.6MWH	Electric Storage
TES_Stratefied_Cold_Water_Tank	Thermal Storage
UCSD Hot Water System	Thermal Storage
UCSD Cold Water System	Thermal Storage
Comfort_Index_Johnson_Control	Interruptible Load
Hot Water Strategy	Generator
STEAM_HEADER	Generator
IntegratedPvStorage_Battery	Electric Storage
IntegratedPvStorage_Solar	Solar Generator
Trade_Street_Warehouse_PV	Solar Generator

After meeting with UCSD, an off-line working diagram of how the resources fit together was drawn up to support integration and modeling efforts.

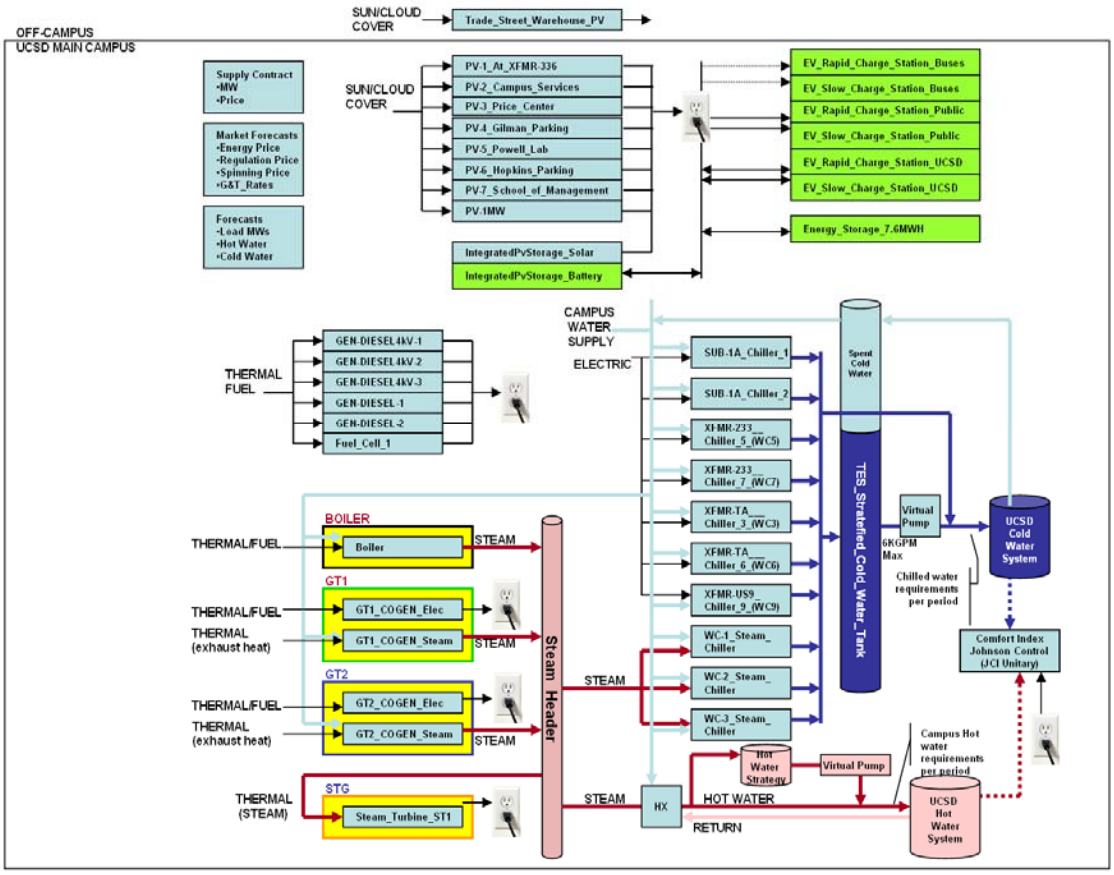

Figure 1. Representative Block Diagram of UCSD Resources.

© 2011 Viridity Energy, Inc. All Rights Reserved

Attributes of the resources were collected from UCSD and/or from Paladin. The information for the input-to-output devices (mapping an input like fuel or electricity to an output like steam or electricity) such as generation, heat exchangers, and chiller devices includes such parameters as:

- Input Energy Type
- Output Energy Type
- Input Mix
- Output Mix
- Incremental Cost
- Ramp Up Rate
- Ramp Down Rate
- Minimum Run Time
- Minimum Down Time
- Startup Time
- Startup Cost
- Operation Cost
- Fuel Consumption Rate
- Emission Rate
- Maximum Run Time
- Nameplate Capacity
- Shutdown Time
- Minimum Output
- Maximum Output
- Availability

The solar generation is modeled with such parameters as:

- Maximum Generation Capacity
- Availability
- Incremental Cost
- Cloud Coverage

The storage devices are modeled with such parameters as:

- Minimum Capacity
- Maximum Capacity
- Loss Rate
- Efficiency
- Minimum Charge Rate
- Maximum Charge Rate
- Minimum Discharge Rate
- Maximum Discharge Rate
- Initial Storage Level
- Fixed End Interval Storage Level

The data can be loaded manually via the user interface. Once entered into the database the information can be maintained via custom scripts. Additionally the data can be loaded using a Viridity data loader tool.

The information was loaded into the application and tests were performed. The results were subjected to sanity checks.

© 2011 Viridity Energy, Inc. All Rights Reserved

Integration of VPower with Paladin

Paladin is an application designed to analyze the distribution power systems. Paladin is used to identify any power system problems with the optimized schedules produced by VPower. The electrical resources modeled in VPower were also modeled directly in Paladin. Additionally, Paladin includes a detailed model of equipment including feeders, switches, transformers, breakers, etc. that do not appear in the VPower model.

XML based interfaces for data exchange between VPower and Paladin were configured for the following categories of data:

- Resource Actual Values
- Resource Initial Conditions
- Resource Forecast Values
- Scheduled Values by Resource
- Power Flow Constraints
- Dashboard data summary

During the exchange of messages via the interface, VPower does a translation from it's own resource names to the names that are used within Paladin.

An integration/development system was put together by Viridity and Paladin to support and test the interface development. The two applications are configured to iterate until a optimized solution is found which does not result in power system violations, or until a maximum number of iterations has occurred.

Installation of VPower software on UCSD Servers

The VPower software solution installed at UCSD includes two servers. One is a linux based server which serves up the User Interface, VPower Core, the Enterprise Service Bus (ESB) and hosts the database software. The other is a Windows server and hosts our VPower Optimizer application.

In addition to the VPower modules and components, the installation process required installing and configuring pre-requisite supporting software including:

- AIMMS
- Java JDK
- Apache Tomcat
- Apache Active MQ
- Filezilla Server
- Postgres/SQL database

Integration of VPower to External Data Feeds

In addition to integration between internal VPower components and with Paladin, the ESB also includes interfaces for receiving weather forecasts and Real Time (RT) and Day Ahead (DA) market prices from the CAISO.

© 2011 Viridity Energy, Inc. All Rights Reserved

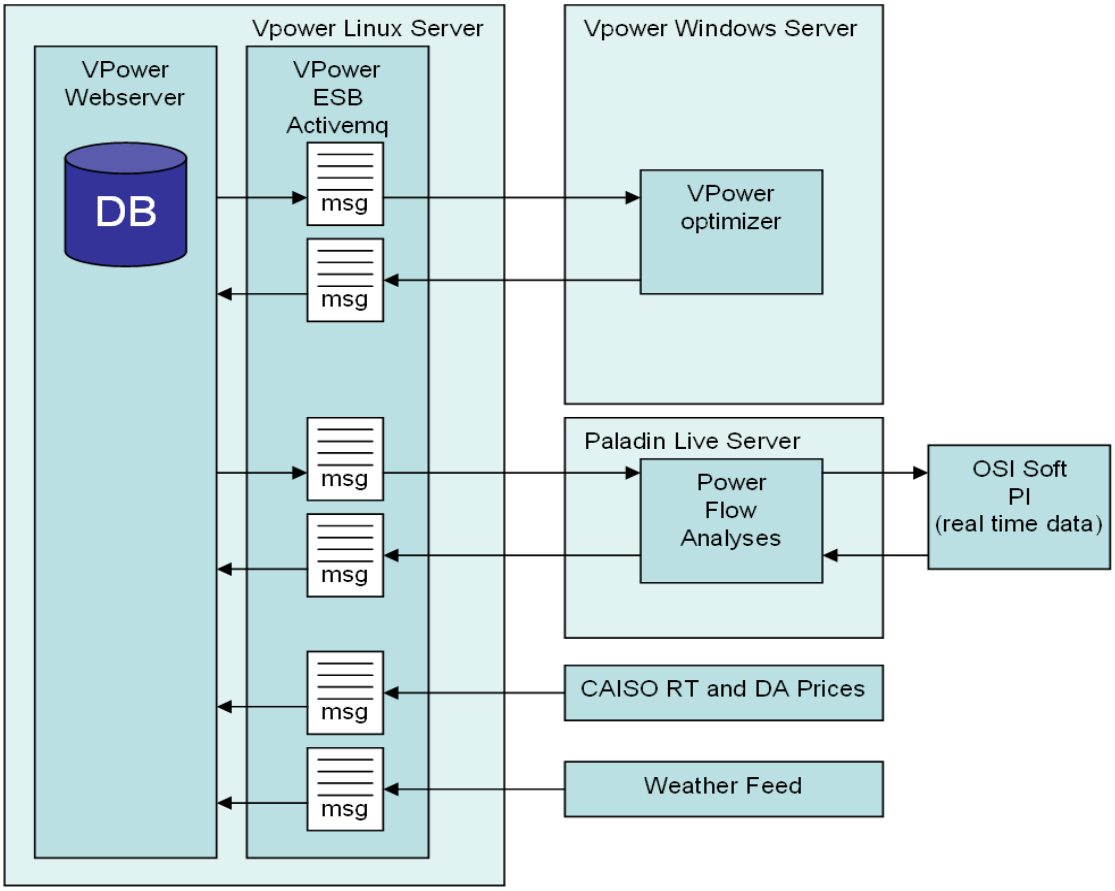

Figure 2. Integration of VPower with Paladin and External Data Feeds.

Lessons Learned

Data Gathering and Preparation Takes Time

Data can come from many places, e.g., manufacturing data, customer provided data, and one-line diagrams, etc. Getting the data into a consistent format and with common units takes some time, and requires some attention to detail.

Expansion of Thermal Model

Expanding VPower to integrate the usage of solar energy with both electrical and thermal storage devices, required VPower enhancements for steam, chilled water, and for hot water. This is important as we know because energy storage can offset the impacts of intermittent resources like wind and storage. While thermal storage may not be able to react as quickly as electrical storage when called upon, the integrated usage can build comprehensive schedules for customer resources so that, acting in concert, they can ensure reliable and economic delivery of energy.

Close Coordination among the Partners is Important

It is important to have a good working relationship between the solution providers. There can be unforeseen issues which will only manifest when implementations are tested. For this reason it is also good to begin the testing process early.

© 2011 Viridity Energy, Inc. All Rights Reserved

Good Working Relationship with the End User is Important
Having a customer that is involved and actively participating in the design and delivery is quite useful. It is also important to remember that key subject matter experts may have constraints on their time, so advanced and independent preparation prior to meetings is desirable.

Multiple owners of infrastructure implementation can be a challenge
Viridity often hosts its solution on its own servers. Customer provided hardware, e.g., servers, may be subject to delivery or order delays. It is a good idea to have an integration/test environment that can be used in advance of the production server availability. Sometimes issues with servers or communications cannot be addressed by the project team and delays are introduced.

Meaningful Screenshots / Graphic Interfaces

Below are some screenshots from the application installed at UCSD.

VPower Login Screen: VPower includes username and password authentication, and role-based access control.

VPower Resource Modeling – Solar Generator Screen: VPower models solar photovoltaic devices installed at UCSD.

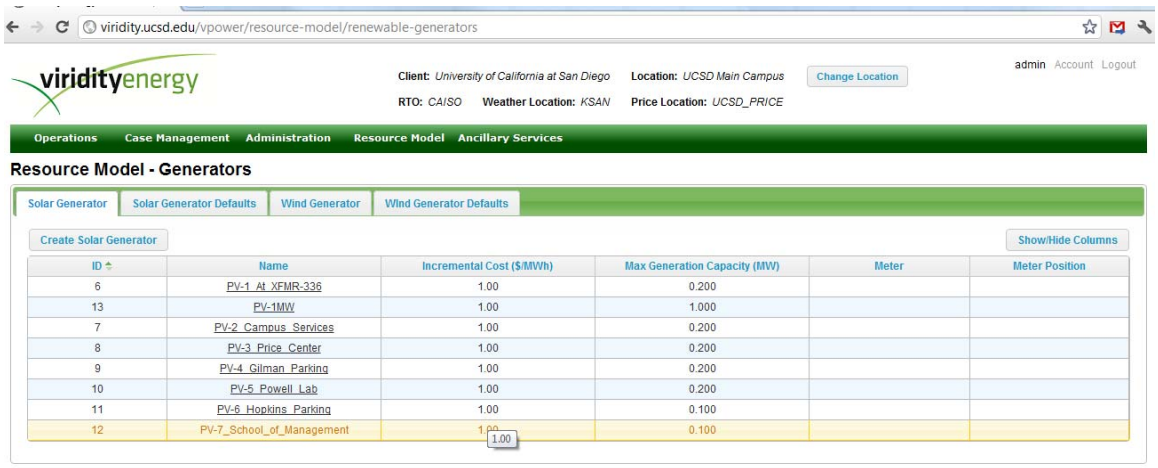

© 2011 Viridity Energy, Inc. All Rights Reserved

VPower Resource Modeling, Electric and Thermal Generators Screen: VPower models devices that produce electricity, steam, hot water and cold water.

Setup New Generator | Show

ID	Name	Input Energy Feeds *Name | Energy Type*	Output Energy Feeds *Name | Energy Type*	Logical Fueled Generators *Name | Input Name | Input Mix Ratio | Output Name | Output Mix Ratio*
14	Boiler	Boiler | THERMAL	Boiler | THERMAL	Boiler_Steam | Boiler | 100 | Boiler | 100
23	Fuel_Cell_1	Fuel_Cell_1 | THERMAL	Fuel_Cell_1 | ELECTRIC	Fuel_Cell_1_LE | Fuel_Cell_1 | 100 | Fuel_Cell_1 | 100
21	GEN-DIESEL-1	GEN-DIESEL-1 | THERMAL	GEN-DIESEL-1 | ELECTRIC	GEN-DIESEL-1_LE | GEN-DIESEL-1 | 100 | GEN-DIESEL-1 | -100
22	GEN-DIESEL-2	GEN-DIESEL-2 | THERMAL	GEN-DIESEL-2 | ELECTRIC	GEN-DIESEL-2_LE | GEN-DIESEL-2 | 100 | GEN-DIESEL-2 | -100
18	GEN-DIESEL4kV-1	GEN-DIESEL4kV-1 | THERMAL	GEN-DIESEL4kV-1 | ELECTRIC	GEN-DIESEL4kV-1_LE | GEN-DIESEL4kV-1 | 100 | GEN-DIESEL4kV-1 | -100
19	GEN-DIESEL4kV-2	GEN-DIESEL4kV-2 | THERMAL	GEN-DIESEL4kV-2 | ELECTRIC	GEN-DIESEL4kV-2_LE | GEN-DIESEL4kV-2 | 100 | GEN-DIESEL4kV-2 | -100
20	GEN-DIESEL4kV-3	GEN-DIESEL4kV-3 | THERMAL	GEN-DIESEL4kV-3 | ELECTRIC	GEN-DIESEL4kV-3_LE | GEN-DIESEL4kV-3 | 100 | GEN-DIESEL4kV-3 | -100
15	GT1_COGEN	GT1_COGEN | THERMAL GT1_COGEN | THERMAL	GT1_COGEN | THERMAL GT1_COGEN | ELECTRIC	GT1_COGEN_Electric | GT1_COGEN | 100 | GT1_COGEN | -100 GT1_COGEN_Steam | GT1_COGEN | 100 | GT1_COGEN | -100
16	GT2_COGEN	GT2_COGEN | THERMAL GT2_COGEN | THERMAL	GT2_COGEN | THERMAL GT2_COGEN | ELECTRIC	GT2_COGEN_Electric | GT2_COGEN | 100 | GT2_COGEN | -100 GT2_COGEN_Steam | GT2_COGEN | 100 | GT2_COGEN | -100
60	Heat_Exchanger Physical	Heat_Exchanger Physical | THERMAL	Heat_Exchanger Physical | THERMAL	Heat_Exchanger | Heat_Exchanger Physical | 100 | Heat_Exchanger Physical | 100
74	Hot Water Strategy Physical	Hot Water Strategy Physical | THERMAL	Hot Water Strategy Physical | THERMAL	Hot Water Strategy | Hot Water Strategy Physical | 100 | Hot Water Strategy Physical | 100
100	STEAM_HEADER	STEAM_HEADER | THERMAL	STEAM_HEADER | THERMAL	STEAM_HEADER_LS | STEAM_HEADER | 100 | STEAM_HEADER | 100
17	Steam_Turbine_ST1	Steam_Turbine_ST1 | THERMAL	Steam_Turbine_ST1 | ELECTRIC	Steam_Turbine_ST1_LE | Steam_Turbine_ST1 | 100 | Steam_Turbine_ST1 | 100

VPower Resource Modeling, Generator Details: Parameters associated with resources

ID	Name	Emission Rate (lb/fuel)	Fuel Consumptio Rate (fuel/MWh)	Incrementa Cost ($/MWh)	Min Down time (hr)	Min Run Time (hr)	Operation Cost ($/hr)	Ramp Down Rate (MW/hr)	Ramp Up Rate (MW/hr)	Startup Cost ($)	Startup Time (hr)	Max Run Time (hr)	Shutdown Time (hr)	Nameplate Capacity (MW)	Sync Reserve Available
24	Boiler_Stear	0.00	1.00	19.00	0.0	0.0	0.00	20.000	20.000	0.00	0.0	999.0	2.0	48.50	false
35	Fuel_Cell_1	0.00	45.00	25.00	0.0	0.0	5.00	2.800	2.800	500.00	4.0	999.0	0.5	2.80	false
33	GEN-DIESEL-1_LE	22.50	16.92	45.00	0.0	0.0	0.00	1.000	1.000	0.00	0.0	30.0	0.0	1.00	false
34	GEN-DIESEL-2_LE	22.50	14.00	45.00	0.0	0.0	0.00	1.000	1.000	0.00	0.0	30.0	0.0	1.00	false
30	GEN-DIESEL4kV-1_LE	0.00	45.00	25.00	0.0	0.0	5.00	2.800	2.800	500.00	4.0	999.0	0.5	2.80	false
31	GEN-DIESEL4kV-	22.50	25.38	45.00	0.0	0.0	0.00	1.500	1.500	0.00	0.0	30.0	0.0	1.50	false

VPower Weather and Price Data Feeds: Input data for the optimization

Weather and Price — Last Updated: 1:35 minutes ago

06-02-2011

Period Ending	Price Timestamp	Day Ahead Price ($)	Realtime Price ($)	Weather Timestamp	Temperature (F°)	Relative Humidity (%)	Cloud Cover (%)
01:00	06/02/2011 08:38	9.47	9.19	06/02/2011 04:16	59.00	72.00	30.00
02:00	06/02/2011 02:57	4.19	7.14	06/02/2011 04:16	58.00	75.00	30.00
03:00	06/02/2011 08:30	0.05	-0.33	06/02/2011 04:16	58.00	72.00	30.00
04:00	06/02/2011 04:57	0.05	3.82	06/02/2011 04:16	58.00	72.00	30.00
05:00	06/02/2011 05:57	2.66	-0.77	06/02/2011 04:16	62.00	65.00	30.00
06:00	06/02/2011 06:57	9.94	0.18	06/02/2011 04:16	64.00	63.00	32.00
07:00	06/02/2011 07:57	24.16	-28.90	06/02/2011 04:16	66.00	56.00	30.00
08:00	06/02/2011 08:38	36.65	-10.28	06/02/2011 04:16	69.00	51.00	25.00
09:00	06/02/2011 08:30	37.43	-26.84	06/02/2011 04:16	70.00	49.00	27.00

VPower View Cases Screen: See the cases which have been created and/or optimized.

viridity.ucsd.edu/vpower/view-case

viridityenergy

Client: *University of California at San Diego* **Location:** *UCSD Main Campus* Change Location

RTO: *CAISO* **Weather Location:** *KSAN* **Price Location:** *UCSD_PRICE*

admin Account Logout

Operations | Case Management | Administration | Resource Model | Ancillary Services

Date Range 06-02-2011 to 06-03-2011 Apply

View Cases — Last Updated: 07 seconds ago

Results	Id	Name	Status	Status Timestamp	Created By	Description	Start Time	End Time	Pricing	Quality CBL	Quality OPT	Objective Cost ($)	Est. Market Revenue ($)	Est. Retail Savings ($)
Details	76731	PADR 06-02-2011 11:27 VADM 06-02-2011 00:00-06-03-2011 00:00	OPTIMIZED	06-02-2011 11:28:16	VADM		06/02/2011 00	06/03/2011 00	REALTIME		MIP: Optimal.	545,607.31	0.00	45,371.77
Details	67786	PADR 06-02-2011 10:49 VADM 06-02-2011 00:00-06-03-2011 00:00	OPTIMIZED	06-02-2011 10:50:09	VADM		06/02/2011 00	06/03/2011 00	REALTIME		MIP: Optimal.	545,360.44	0.00	45,681.06
Details	64364	PADR 06-02-2011 10:14 VADM 06-02-2011 00:00-06-03-2011 00:00	SUBMITTED	06-02-2011 10:15:32	VADM		06/02/2011 00	06/03/2011 00	REALTIME			0.00	0.00	0.00
Details	62253	PADR 06-02-2011 09:09 VADM 06-02-2011 00:00-06-03-2011 00:00	NEW		VADM		06/02/2011 00	06/03/2011 00	REALTIME			0.00	0.00	0.00
Details	62227	PADR 06-02-2011 08:56 VADM 06-02-2011 00:00-06-03-2011 00:00	NEW		VADM		06/02/2011 00	06/03/2011 00	REALTIME			0.00	0.00	0.00

Version: 1.4.0 UCSD_Integration-SNAPSHOT

© 2011 Viridity Energy, Inc. All Rights Reserved

Overview of Case Results: Savings, MWs and Real-time LMPs

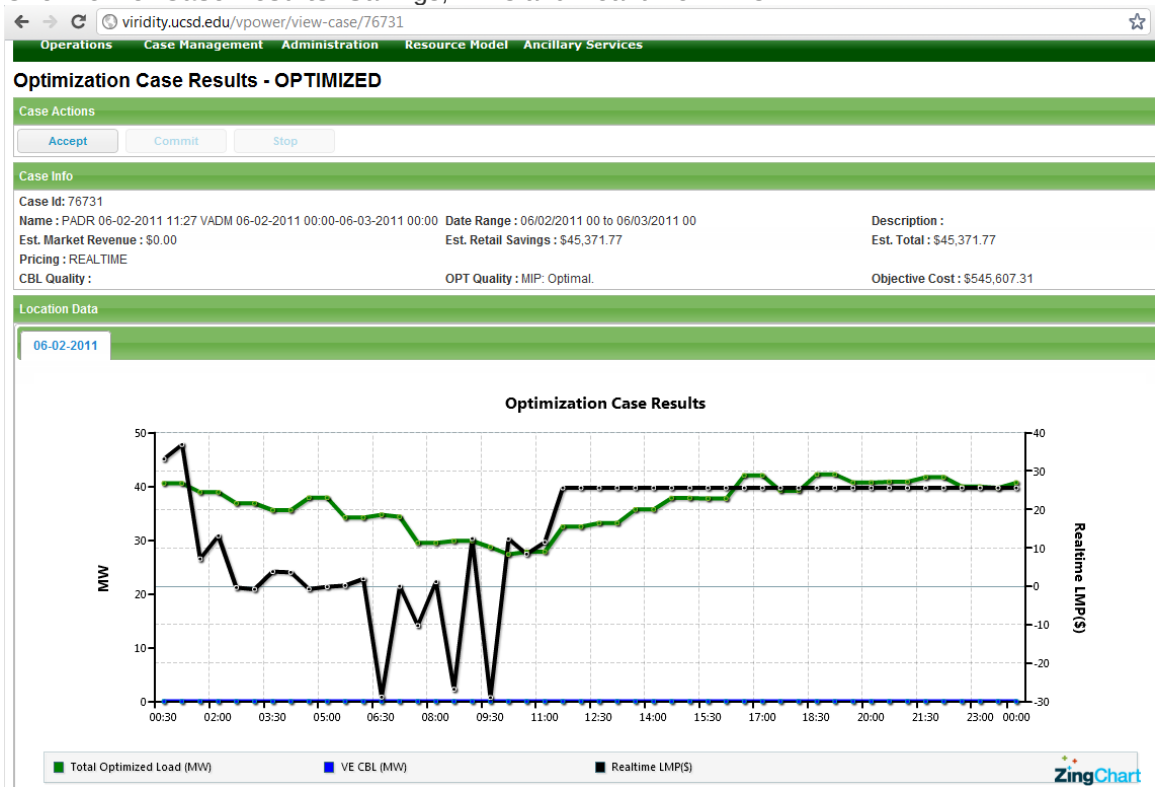

Overview of Case Results: Resource Scheduled MWs and Emissions Quantities

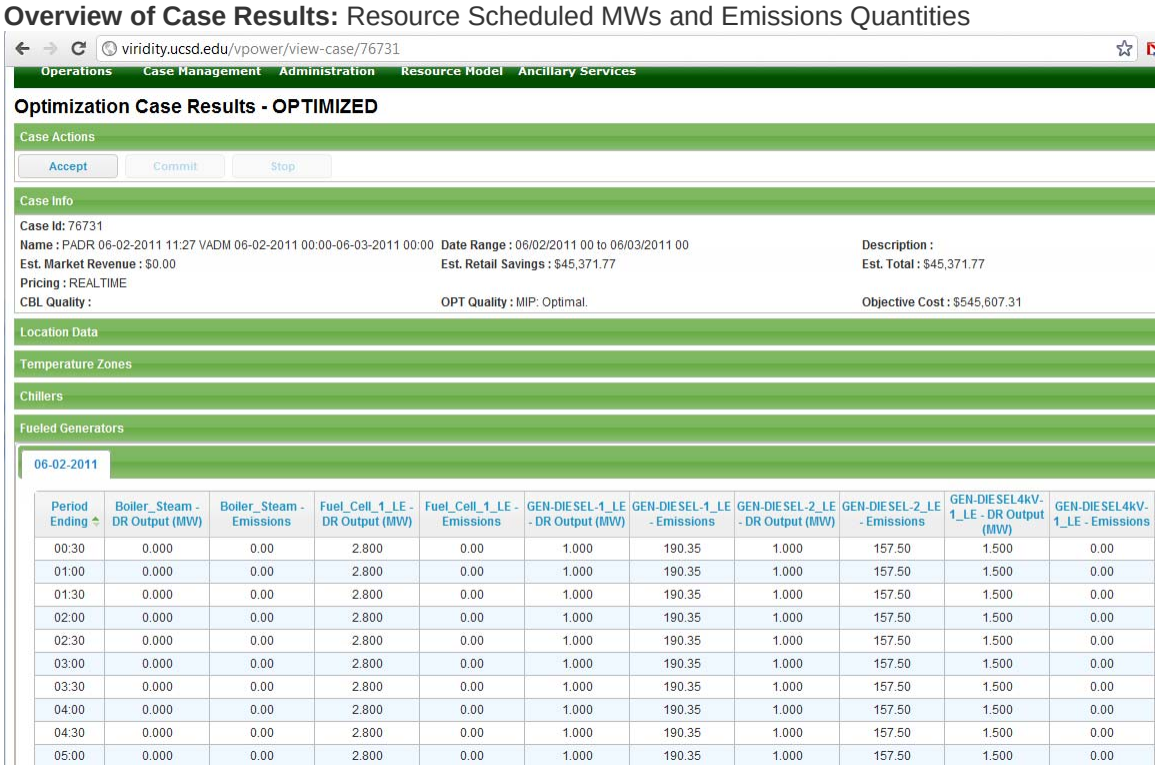

Period Ending	Boiler_Steam - DR Output (MW)	Boiler_Steam - Emissions	Fuel_Cell_1_LE - DR Output (MW)	Fuel_Cell_1_LE - Emissions	GEN-DIESEL-1_LE - DR Output (MW)	GEN-DIESEL-1_LE - Emissions	GEN-DIESEL-2_LE - DR Output (MW)	GEN-DIESEL-2_LE - Emissions	GEN-DIESEL4kV-1_LE - DR Output (MW)	GEN-DIESEL4kV-1_LE - Emissions
00:30	0.000	0.00	2.800	0.00	1.000	190.35	1.000	157.50	1.500	0.00
01:00	0.000	0.00	2.800	0.00	1.000	190.35	1.000	157.50	1.500	0.00
01:30	0.000	0.00	2.800	0.00	1.000	190.35	1.000	157.50	1.500	0.00
02:00	0.000	0.00	2.800	0.00	1.000	190.35	1.000	157.50	1.500	0.00
02:30	0.000	0.00	2.800	0.00	1.000	190.35	1.000	157.50	1.500	0.00
03:00	0.000	0.00	2.800	0.00	1.000	190.35	1.000	157.50	1.500	0.00
03:30	0.000	0.00	2.800	0.00	1.000	190.35	1.000	157.50	1.500	0.00
04:00	0.000	0.00	2.800	0.00	1.000	190.35	1.000	157.50	1.500	0.00
04:30	0.000	0.00	2.800	0.00	1.000	190.35	1.000	157.50	1.500	0.00
05:00	0.000	0.00	2.800	0.00	1.000	190.35	1.000	157.50	1.500	0.00

© 2011 Viridity Energy, Inc. All Rights Reserved

VPower Results on the Paladin Dashboard: The interface between VPower and Paladin supports the population of data on the dashboard. See the lower right hand panel for information that comes from VPower but which is populating a screen provided by Paladin.

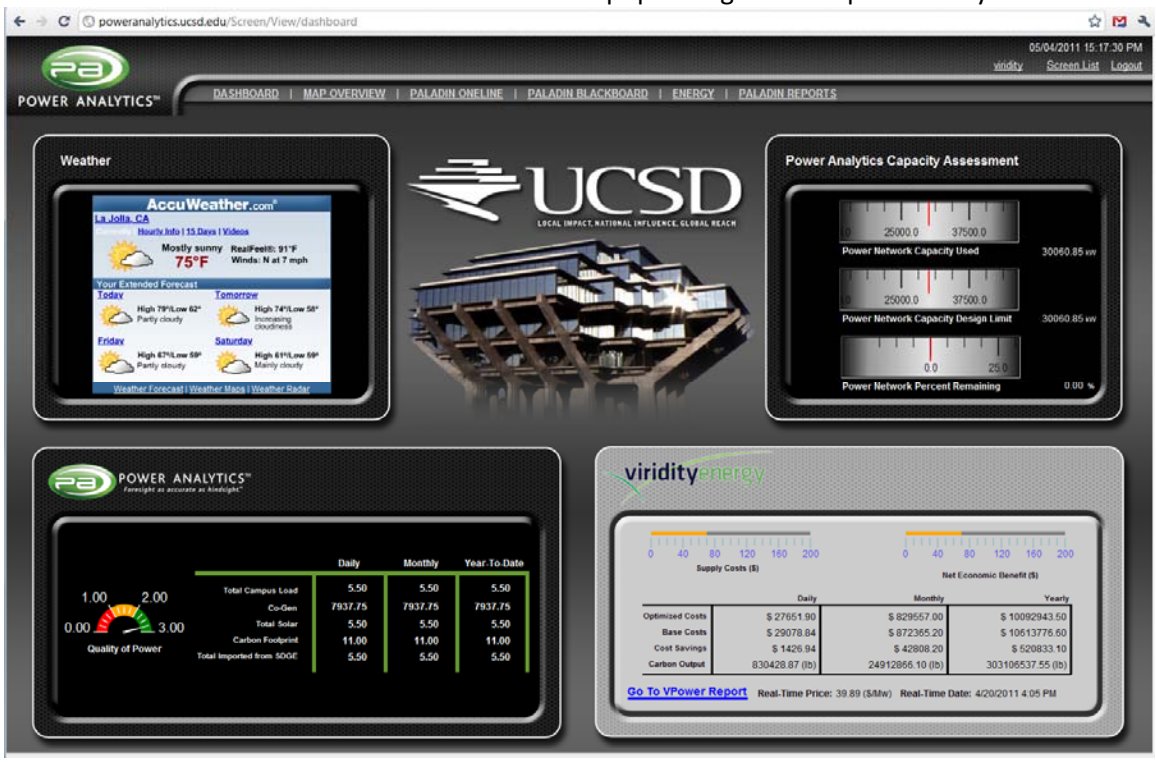

© 2011 Viridity Energy, Inc. All Rights Reserved