GO solar CALIFORNIA

CSI RD&D PROGRAM

Grid Integration

Grantee:
University of California, Irvine Advance Power and Energy Program

Partners:
Pacific Gas & Electric

CSI RD&D Funding:
$297,564

Match Funding:
$100,845

Project Timeframe:
2011-2013

RD&D Project Portal:
calsolarresearch.ca.gov/csi/63

Development and Analysis of a Progressively Smarter Distribution System

OVERVIEW AND OBJECTIVES

The limitations of high-penetration photovoltaics (PV) on the utility distribution system are not well known, and utility personnel have concerns that the current distribution system cannot support high levels of solar distributed generation penetration. To address these barriers, the University of California Irvine (UCI) developed modeling tools to simulate distribution circuits, collaborated with Pacific Gas & Electric (PG&E) to acquire, analyze, and evaluate circuit performance data from circuits with high penetration PV, and evaluated the control and integration of existing major components on both the primary and secondary distribution system. The research sought to identify PV integration limitations of standard operating procedures and develop a progressively smarter distribution system to mitigate distribution circuit limitations that might otherwise delay the goals of the California Solar Initiative (CSI) program.

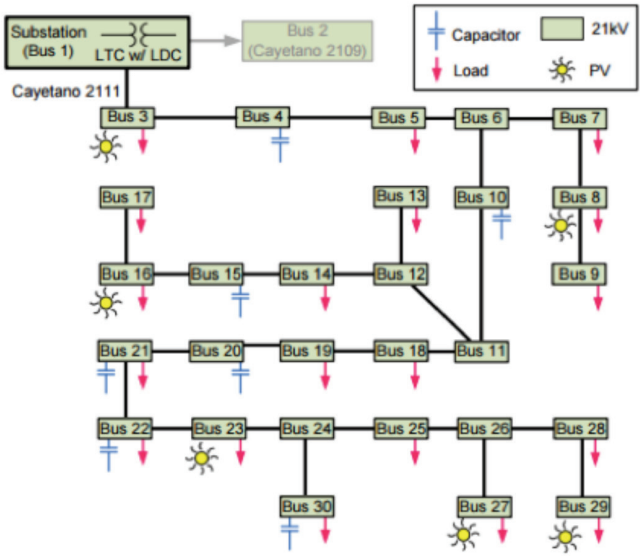

Commercial Circuit Balanced Three Phase Model

This document provides a brief project description. For more detail on the project and the California Solar Initiative's (CSI) Research Development, Demonstration & Deployment (RD&D) Program, please visit calsolarresearch.ca.gov

The CSI RD&D Program is managed by Itron on behalf of the California Public Utilities Commission (CPUC).

Itron | CSI RD&D PROGRAM MANAGER

METHODOLOGY

The UCI team developed, evaluated, and verified a model for comparison to grid monitored data. Two specific distribution system configuration scenarios were evaluated— the first scenario included many small PV systems, and the second scenario consisted of fewer but larger PV systems. The team next determined the limits for PV penetration within existing circuit architectures with current technology. The risks and benefits of advanced inverter control were assessed along with the development and evaluation of integrated control strategies to support the increased penetration of PV in the distribution system. Lastly, the research team evaluated the practical feasibility of the relevant standards, hardware, and communications needed to enable progressively smarter distribution systems.

RESULTS AND OUTCOMES

This research provided the needed information and understanding regarding:

- Modeling methodology to evaluate PV installation on distribution circuits.
- PV penetration limitations and tradeoffs.
- Control strategies and communication advances that may be required to achieve different levels of PV penetration.
- Regulatory and technology barriers.

The project evaluated the control and integration of existing major components on both the primary and secondary distribution system. Two specific distribution system configuration scenarios were evaluated, one with many smaller PV installations and a second with fewer larger PV installations. The project identified PV integration limitations of standard operating procedure and developed a progressively smarter distribution system to mitigate distribution circuit limitations that might delay the CSI goal of installing 3,000 MW of new solar generation by 2017.

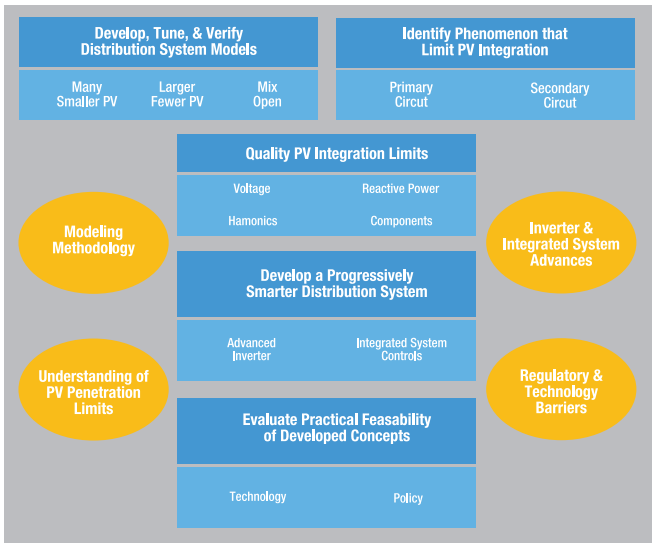

Project approach and projected major insights

PUBLIC BENEFITS

Contributes to the understanding of PV integration limits and the development of a progressively smarter distribution system required to enable flexible integration of PV installations in California.

Provides insights into modeling methodologies, and limits to PV penetration, as well as progressive actions that can be taken to enable wide-scale deployment of solar distributed generation technologies.

Improves the economics of solar by reducing the need for costly ad hoc load flow studies and custom engineering analysis to determine whether the PV installation creates unacceptable circuit conditions.

Increases the value of PV installations by enabling ancillary services such as active power filtering and controlled reactive power support.

Demonstrates how advanced inverters and communication along monitored points on distribution circuits can be used to increase PV interconnection limits progressively.

Focuses on a staged implementation with progressive benefits to minimize the early cost while maximizing future circuit performance.