GO solar CALIFORNIA

CSI RD&D PROGRAM

Business Development and Deployment

Grantee:
Viridity Energy

Partners:
Energy & Environmental Economics, University of California, San Diego, San Diego Gas & Electric, California Independent System Operator

CSI RD&D Funding:
$1,660,000

Match Funding:
$840,000

Project Timeframe:
2010-2013

RD&D Project Portal:
calsolarresearch.ca.gov/csi/73

Innovative Business Models, Rates, and Incentives for Integration of High Penetration Photovoltaics

OVERVIEW AND OBJECTIVES

One of the key barriers to fully integrating renewable energy into the electricity grid is the uncertainty of the availability and delivery of the energy resource at the time of need. To address this barrier, the Viridity team simulated and then demonstrated in real time, new business models for improving the economics and incentives for integrating high penetration photovoltaic (PV) systems and intermittent renewables using campus distributed energy resources (DER). The broad goal of this research was to explore how optimizing and managing DER dispatch schedules in real time and planning time horizons, coupled with changes in incentives and tariffs can cost-effectively support the integration of high penetrations of solar PV to meet California solar initiatives. The host site for this research was the University of California, San Diego (UCSD) microgrid, which has a rich DER base that includes a 2.8 MW fuel cell powered by directed biogas, 30 MW of onsite generation, steam and electric chillers, thermal storage, and roughly 1.5 MW of onsite solar PV. Using Viridity's VPower[1] software as part of the UCSD master controller system, the team demonstrated how managing the flexibility of campus load can be used to support PV integration while still meeting campus energy needs and taking advantage of potential cost savings and market revenue opportunities. A cost-benefit analysis of proposed tariffs and strategies was performed that balances costs and benefits from the utility, customer, and ratepayer perspectives.

[1] *Viridity's VPower platform is proprietary software developed to manage and optimally schedule demand-side resources and bidding strategies using numerous economic and operational inputs.*

This document provides a brief project description. For more detail on the project and the California Solar Initiative's (CSI) Research Development, Demonstration & Deployment (RD&D) Program, please visit calsolarresearch.ca.gov

The CSI RD&D Program is managed by Itron on behalf of the California Public Utilities Commission (CPUC).

Itron | CSI RD&D PROGRAM MANAGER

METHODOLOGY

The Viridity team modeled UCSD resources within the VPower database, focusing on the UCSD Central Utility Plant (CUP). One year of historical metered interval data was used to baseline the CUP resources and to understand overall system efficiency and typical operations. Three strategies (peak load shifting, PV firming, and grid support) were developed to test DER's operational and economic viability and flexibility. The energy impacts, costs, and benefits for each strategy were evaluated against a base case defined by UCSD microgrid's status quo. VPower was installed on servers at the UCSD campus and integrated with the campus master controller supporting data exchange with campus real-time and historical cost, load, and resource data. The team developed the UCSD Dispatch Optimization Tool, built on the Analytica software program, to quantify the net benefits of each proposed business strategy. This tool performs hourly dispatch optimization to implement scenario analysis over hourly, monthly, and annual time scales.

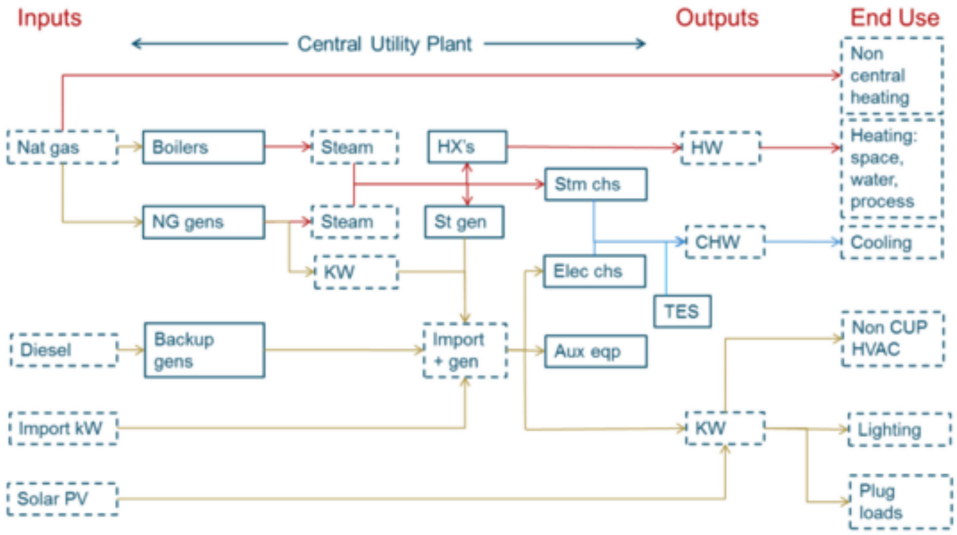

UCSD Microgrid: Campus Resources Energy Flow Diagram

Example output of model optimization tool for scenarios that include and exclude all hours demand charge

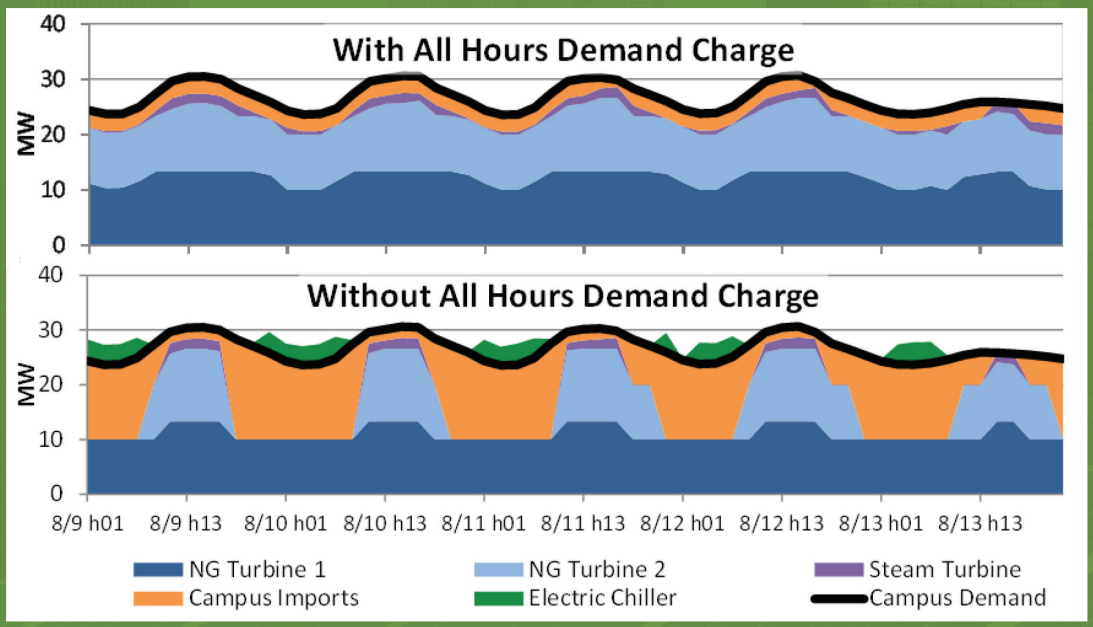

RESULTS AND OUTCOMES

Two key results were accomplished during this project. First, Viridity's VPower platform was expanded to manage key aspects of a microgrid and integrated as part of the UCSD master controller. Second, the UCSD Dispatch Optimization Tool provided a simulation and analysis environment that allowed the team to study and recommend three technically and economically feasible strategies to support PV integration. The team's findings suggest that DER are technically capable of providing cost-effective integration services, however program design changes are needed to strengthen the business case for large commercial and industrial (C&I) customers. These changes include: Removing the non-coincident demand charge could increase customer's cost-effective peak-load reduction. Peak load shifting: In the case of UCSD, the estimated increase is about 1 MW.

PV firming: PV firming with a customer's own resources is feasible but may be more costly than relying on the grid. Based on the UCSD case, there is a need for further research to assess the cost-effectiveness of using alternative cost and tariff structures applied at the distribution level.

Grid support: A large customer may profitably offer grid support services. For the UCSD case, small energy cost savings were found, but the savings can increase with additional resources enlisted.

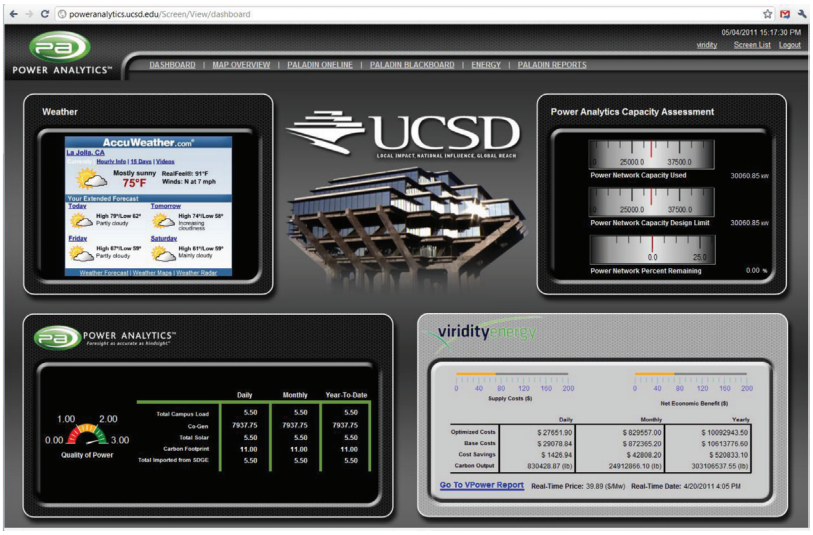

Power Results Dashboard with Viridity's VPower. Information includes real-time base and optimized costs, cost savings, and carbon output.

PUBLIC BENEFITS

Technical potential: C&I loads have significant technical potential to provide renewables integration strategies in California.

Policy changes: Analysis shows that removing the all-hours demand charge can decrease load by ~ 1 MW at UCSD. The value of reducing load by 10 MW (2% of California campus load) is about $1.0 million annually using 2013 avoided capacity costs.

Integration at the distribution level: Analysis suggests UCSD can firm its solar PV using its own resources at a cost comparable to relying on the grid.

Grid support: Analysis suggests it is economical for UCSD to provide grid support based on regulation prices but the net benefit to UCSD is relatively low. Ancillary service revenue alone may be insufficient for motivating loads to provide grid support, and alternate products and incentives may be required.

Beyond renewables integration, this project provided insights, tools, and strategies that can be used by California colleges and others to support efforts in reducing energy consumption, costs, and greenhouse gas emissions.