CSI RD&D4 Task 4.3 Final Report

Understanding and Counteracting Real Power Oscillations

Submitted to:

California Solar Initiative RD&D Program

October 2016

Submitted by:

Xin Zhao, William Torre, Chuck Wells, Raymond A. de Callafon

Department of Mechanical and Aerospace Engineering

Jacobs School of Engineering

Center for Energy Research

University of California, San Diego

9500 Gilman Drive

La Jolla, CA 92093-0411, USA

EXECUTIVE SUMMARY

Synchrophasor data generated by Phasor Measurement Units (PMUs) allow time synchronized observations of disturbances and power oscillations on an electric grid possibly caused by sudden generation loss, topology modifications, and load changes. As PMUs create data streams with harmonic content in excess of 30Hz sampling contain valuable information on the dynamics of the electric power grid. The synchrophasor data can be used for automatic detection and quantification of disturbance events and to quantify dynamic behavior of an electric power grid useful for control design. In this task modern signal processing techniques with recursive estimation methods facilitated the real-time detection of disturbance events by automatically adjusting the threshold levels of each PMU distributed throughout the electric grid for event detection. Furthermore, once a disturbance has been detected, it is shown how the dynamics of power flow in an electric grid can be estimated from the event by estimating the oscillation frequencies and damping parameters using a realization algorithm. Both the event detection algorithm and the realization methods are bundled in a Matlab software package called "PMUCSD" and have been tested on several disturbance events provided by North American SynchroPhasor Initiative (NASPI) and presented at both the annual NASPI meeting and the Joint Synchrophasor Information Subcommittee (JSIS) meeting of the WECC. Real-time detection of disturbance events can be implemented on each PMU independently, allowing a scalable solution for a network with a limited bandwidth for relevant PMU data transmission. For hardware-in-the-loop simulation, the real-time event detection and dynamic characterization of disturbances is illustrated on PMU data measured at the University of California, San Diego and experimental results obtained from a three phase Resistor-Inductor-Capacitor (RLC) network. The three phase RLC network was used to illustrate measurable 3 phase real power oscillations and the PMUCSD software was used to model the dynamics of the power fluctuations. Based on the dynamic model a control algorithm was developed that was able to dampen and mitigate power oscillations by filtering the PMU data and sending control signal computed on the basis of the filtered PMU signal to a One-Cycle Control (OCC) grid tied inverter. Therefore inverters of solar power or battery energy storage systems can be used to improve power quality in the electric grid.

1 INTRODUCTION

More renewable energy generation leads to inherent variability in energy production. In addition, solar PV in its conventional design lacks the rotational inertia of conventional generation and therefore are not able to stabilize and maintain synchronous operation of the system. This combination of increased variability and lack of physical inertia could result in increasing instability and poorly damped oscillations in AC frequency and power. These instabilities can lead to increased wear and tear on the electrical grid, increased outages, and even electrical equipment damage.

More generally, instabilities on the grid can be caused by generation loss, topology and load changes, and increased penetration of renewable power sources. An example of such power oscillations is shown in Figure 1, where oscillations in real power were observed in the 12 kV connections at the University of California, San Diego during a particular load switching. In general, electric power systems are subjected to power oscillations due to the inherent inertia of generators and loads. Such power oscillations are typically in the 0.2-3 Hz range, depending on the size of the (micro)grid and the characteristics of the interconnected power system. Additionally, measurements on distribution networks indicate harmonic and non-sinusoidal power flow and, especially in microgrids, they are showing that overall power quality may not meet standards. The electric power industry is beginning to observe power grid dynamic behavior through abundant Phasor Measurement Units (PMUs). For example, five relay based PMUs and dedicated PMU devices have been operational on the UCSD microgrid. The distributed nature of the PMUs provides source measurement required to compute the angle difference across the entire campus.

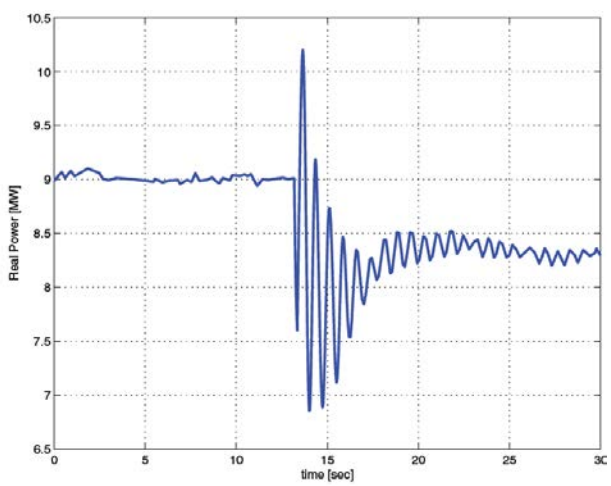

Figure 1 Measured real power oscillation on the main 3 phase interconnect of the UCSD Micro-Grid during a step-wise load demand change.

Detecting fluctuations in power flow in an electric grid has been an active field of study that can improve the resiliency of electric networks. Power swing detectors that can detect unstable power swings in several milliseconds are crucial for relay operation. In case of stable power oscillations, frequency and

damping of electro-mechanical oscillations can be performed with a ring down analysis or a normal operation analysis. Assuming an unknown non-zero initial condition, eigenvalues or the frequency / damping of the observed power oscillations can be computed using the Pronys method for ring down analysis [4] assuming the power oscillation is a sum of sinusoids or more advanced methods using wavelet transforms. In these methods, power oscillation dynamics are found by fitting models on the free response of an observed stable power oscillation.

2 TASK GOALS

The objective of this subtask was to develop, operationalize, and demonstrate an energy storage dispatch control scheme that can mitigate power fluctuations. The first part of this task was to show how three phase real power measurements can be used to formulate a low order dynamic model of an electric (micro)grid by observing power oscillations due to a load or generation disturbance. The second part was to apply this model to develop an energy storage dispatch control scheme to mitigate these disturbances.

2.1 Identifying a low order model

The disturbance that causes power oscillations could be a line switching, a load switching, a fault, among others. As these disturbances are typically step disturbances, explicit information on the shape of the input signal that caused the power oscillation will be beneficial, especially when multiple step signals occur in close proximity in time. Explicit use of input and observed output signals via a system identification procedure will improve the quality of the models that capture the power oscillations.

The low order model of the power oscillations is formulated in the format of a discrete-time state space model that is a set of coupled first order difference equations of the format

$$x(t+1) = Ax(t) + Bu(t)$$

$$y(t) = Cx(t),$$

where the output $y(t)$ reflects the time t synchronized power flow measurements produced by a PMU, $u(t)$ is the step-wise input signal, and $x(t)$ is the internal state of the power flow. It is important to realize that the size of the state $x(t)$, and, thus, the state matrix A, input matrix B and output matrix C are kept as small as possible (known as a low order model) to facilitate simplified models for which control design and hardware-in-the-loop simulation will be possible. A low order state space model that accurately captures frequency and damping of the power oscillations can be estimated via a realization algorithm that uses transient effects as will be shown in Section 6.

2.2 Energy storage dispatch control scheme

Once the model is available, it can be used to formulate and demonstrate an energy storage dispatch control scheme by using the model to develop a linear control algorithm indicated by $K(q)$ that can minimize the effect of an external disturbance $v(t)$ in

$$x(t+1) = Ax(t) + B_i u_i(t)$$

$$y(t) = Cx(t) + v(t)$$

$$u_i(t) = K(q)y(t)$$

where the time t synchronized power flow measurements $y(t)$ produced by a PMU are now fed back into a control algorithm $K(q)$ to feed actual inverter input $u_i(t)$ connected to the same grid on which earlier

step-wise disturbances *v(t)* were present. It should be noted that the input matrix B has changed to B_i as the location of inverter and its input $u_i(t)$ may not be collocated with the step wise disturbances used to measure the power flow dynamics. However, the location of the PMUs producing the real-power data and the dynamics of the grid remains unaltered, allowing us to use the same state matrix A and output matrix C for the control design. As a result, the to-be-controlled grid dynamics are now described by

$$G(q) = C(qI - A)^{-1}B_i$$

and this expression is used for the design of the controller $K(q)$. The control algorithm $K(q)$ used to mitigate power oscillation disturbances consists of a series of linear filters,

$$K(q) = H(q)S(q)L(q)$$

each with a specific purpose (Figure 2). The first filter $L(q)$ is a low pass filter that ensures only inverter control signals $u_i(t)$ below a certain frequency are being send to the inverter. The high pass filter $H(q)$ ensures that the controller only reacts on changes or oscillations in power fluctuations $y(t)$ and not to steady state changes. Last, but not least, the $S(q)$ is the stabilizing filter that ensure the feedback connection of the state space model

$$x(t+1) = Ax(t) + B_i u_i(t)$$

$$y(t) = Cx(t) + v(t)$$

and the feedback controller

$$u_i(t)K(q)y(t)$$

is stable and improves the damping of the uncontrolled electric grid system. The design of the stabilizing filter $S(q)$ takes into account the modelled dynamics of the power flow oscillations modelled in the state space system.

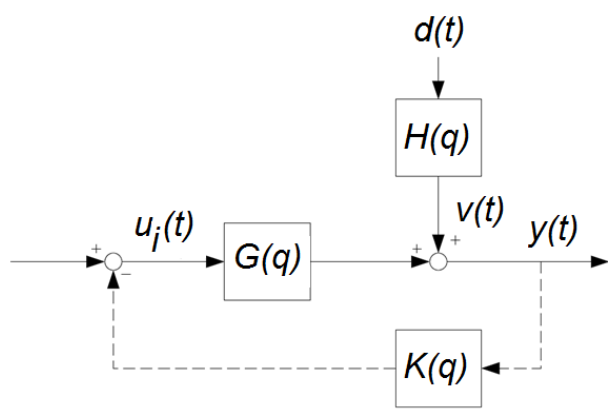

Figure 2 Schematic diagram of feedback control configuration implemented in the testbed for power oscillation control. The model G(q) represents the to-be-controlled grid dynamics with the grid-tied inverter, H(q) is the dynamic model of the step-wise disturbance d(t) affecting the power flow measurement y(t) via the output disturbance v(t) and K(q) is the control algorithm producing the control signal $u_i(t)$ to the grid-tide inverter.

3 OVERVIEW OF PMU MEASUREMENTS AT UCSD

For the past years, five relay based PMUs and dedicated PMU devices have been operational on the microgrid of UCSD. An overview of the location of the current operating PMUs are shown on the UCSD campus map in Fig. 1. Typically, 40 or more measurements from each PMU are archived at the rate of 30 or 60 Hz in an OSIsoft PI server system located at UCSD.

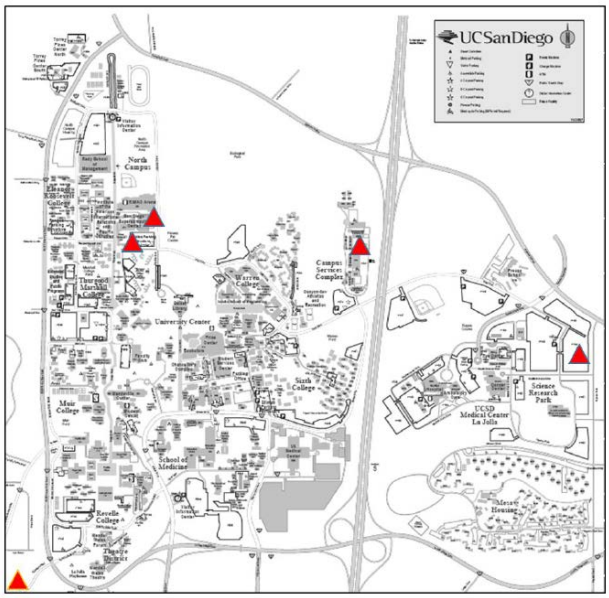

Figure 3: Overview of PMU locations (orange triangles) on the UCSD campus microgrid

The PMU shown in the bottom left of the map in Fig. 1 is located at Scripps Institute of Oceanography about one mile to the southwest of its location shown on the map. This PMU is in a building with critical cooling and refrigeration load. The PMUs shown in the upper left of the map are located at the San Diego Super Computing Center (SDSC) that is a critical load of over 3 MW. The PMU in the upper center of the map is located in the main 69kV/12kV feeder substation and the PMU on the far right is located at the far eastern edge of the campus. This provides source measurement required to compute the angle difference across the entire spread of the campus.

The PMU data that UCSD generates is currently being stored and processed using the new SyGMA laboratory created at the San Diego Supercomputer Center and directed by Prof. de Callafon. The SyGMA lab houses several OSIsoft data server that can handle large volumes of PMU data exported in C37.118 format and process PMU data in real-time. More information on the SyGMA laboratory can also be found at http://sygma.sdsc.edu/.

4 LAB EXPERIMENTAL SETUP

An experimental setup is required to verify the performance of three phase real power oscillations and possibly install a real-time damping control system. The experimental setup is used to repeat and initiate the scenario of an oscillatory three phase power disturbance similar to what could be observed on the real power grid. As DC power created by PV panels or stored in batteries is exported to the grid via an inverter, a Grid-Tied Inverter (GTI) is used to synchronize the AC output with the grid. An experimental setup is built as shown in Figure 4 and Figure 5. For testing purposes, the PV or storage system is emulated by a programmable DC power source. The Grid Tied Inverter (GTI) is a GTI3100A6208/3652IR-PQ manufactured by One-Cycle Control Incorporation. It is a four-quadrant inverter, which is capable of accepting external control signals for implementation of feedback control to control or dampen power oscillations. Additional EMI filters FN2200B are placed between the DC source and the inverter to eliminate the effect of common AC mode currents due to the high frequency Pulse Width Modulation (PWM) of the GTI. The output of the inverter is connected to the grid through a three-phase switch and a circuit breaker to limit the current for protection.

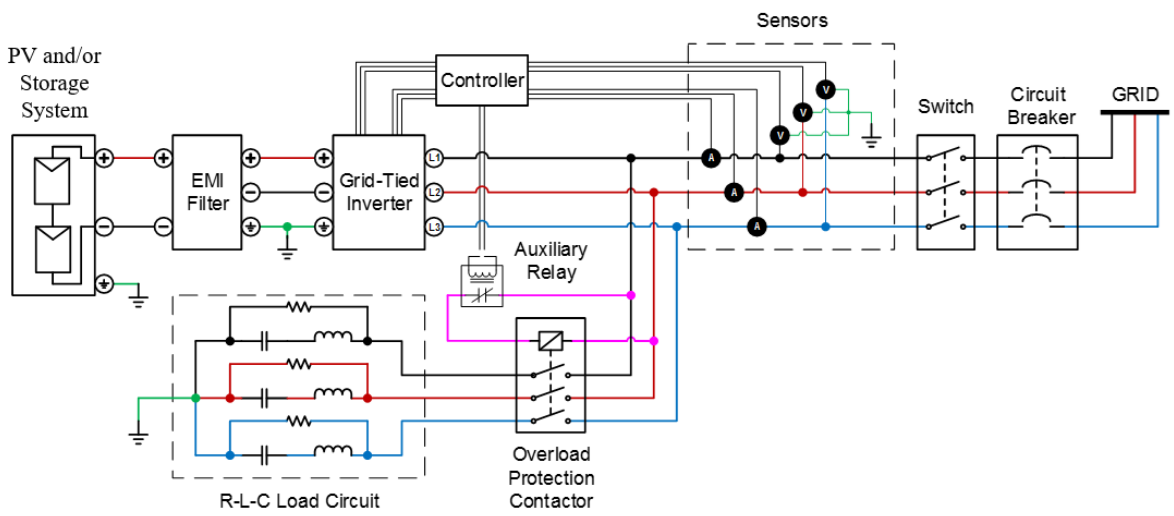

Figure 4 Diagram of experimental setup with DC power supply simulating the PhotoVoltaic (PV) or storage power source, an EMI filter to reduce AC ground coupling and a Grid-Tied Inverter (GTI) to provide 3 phase AC power. The GTI is controlled by an external controller that can control the four quadrant power flow through the GTI, while the controller also digitally switches an auxiliary relay to switch in a three phase Resistor-Inductor-Capacitor (RLC) circuit to initiate three phase power oscillations in the circuit. Three phase voltage and current measurements (sensors) are processed by the controller to compute real-time power oscillation in the circuit.

Figure 5 Front of the testbed housing the components depicted in Figure 4 for real-time analysis and identification of real power oscillations.

A three-phase RLC load circuit is designed and integrated into the testbed to act as a real power disturbance. As depicted in Figure 4, each phase is composed by a bypass resistor of 100 Ω that is in parallel with a series connection of a capacitor of 0.01F and an inductor of 0.1H. The Inductor-Capacitor (LC) circuit generates a resonance; the bypass resistor consumes real power and also discharges the LC circuit while it is not energized. The circuit is connected to the output of the grid-tied inverter through an overload protection relay.

A controller with National Instruments (NI) myRIO is integrated into the testbed for data acquisition and controlling the grid-tied inverter. The three-phase AC voltage and current signal of the grid-tied inverter is measured, conditioned, and sent into the controller. The controller can also send out control signals via a signal conditioning circuit to drive the grid-tied inverter and to switch in the load circuit to the system by energizing the overload protection contactor via an auxiliary relay. A photo of the testbed is shown in Figure 5. The parts are aligned and mounted in a cabinet for safety consideration. In the RLC load circuit, an array of AC capacitors is formed as a capacitive load. The control diagram of the testbed is depicted in Figure 2.

5 EVENT DETECTION FROM PMU SIGNALS

5.1 Introduction

In addition to external perturbations from the area electric power system, the UCSD campus experiences internal microgrid disturbances due to non-linear loads from laboratory experiments and hospitals on campus. Additional disturbances caused by the campus Combined Heating and Power Plant, local heating and additional electric chiller loads, fuel cell and large battery loads from multiple experimental battery systems continually perturb the power quality of the microgrid. At times, tens to hundreds of significant local disturbances occur each day on the UCSD campus resulting from both local sources or external disturbances within WECC.

Each disturbance event on a microgrid, either local or external, excites the dynamics of the power network. In case of the UCSD microgrid, a disturbance event provides valuable information on the dynamic parameters of the microgrid and can be used to study the stability of either the WECC grid or the UCSD microgrid, depending on whether the event is local or WECC wide. However, to study and monitor the stability of the grid, first the disturbance event must be detected [6].

Signal processing techniques that are currently used for event detection on the basis of PMU data are based on a moving Discrete Fourier Transform (DFT) [1] or specially designed (linear) band pass filters that extract features from the PMU data in user-specified frequency bands [2]. Although these techniques are successful in many applications in which PMU data are used to monitor electric power quality, it requires the specification of accompanying threshold levels in the user-specified frequency bands for event detection. The threshold values for event detection will depend highly on the quality and noise properties of the data produced by the PMU, requiring tuning for each PMU distributed on the electric grid. Furthermore, filtering or a DFT of the PMU signal does not extract the valuable information on the dynamic parameters of the microgrid.

In this section signal processing with recursive estimation is used to facilitate real-time detection of disturbance events (in user-specified frequency bands) by automatically adjusting the threshold levels for each PMU distributed throughout the electric grid. Once a disturbance has been detected, it is shown how the event is quantified by its dynamic parameters by estimating the oscillation frequencies and damping parameters using a realization algorithm. Computations for adjustment of threshold levels and the real-time detection of disturbance events are implemented on each PMU independently, providing a distributed solution for a network with a limited bandwidth for PMU data streaming. The algorithm is robust to data outliers due to the monitoring of prediction error variance in the estimation of threshold levels. The real-time event detection and dynamic characterization of disturbances is illustrated on PMU data measured at UCSD.

PMUs may produce multiple (noisy) data streams in excess of 30 Hz. Therefore, sampling and processing the data streams via moving DFT or filtering for detecting events visually becomes time consuming and cumbersome. It is necessary to develop a means of automatically detecting disturbance events via a threshold crossing to appropriately mark the beginning of an event and automatically determine the

dynamic parameters that describe the disturbance event. Electric power grid data is noisy, not only due to inherent PMU sensor noise, but mostly due to the stochastic behavior of switching loads on the electric power grid. Therefore, there is not a constant threshold that can be used for each PMU on an electric power grid and adaptation must be used for event detection. An automatic method of event detection was developed that does not entirely depend on a threshold crossing. Instead, it includes three distinguishable components: (1) one step ahead prediction error minimization, (2) a filtered rate of change, and (3) an adaptive threshold crossing.

5.2 One step ahead prediction error minimization

For the one step ahead prediction error minimization, consider the frequency signal $F(k)$ generated by a PMU as function of the time index k. The time index is related to the time stamp of the time synchronized PMU where the sampling time is typically 30 Hz. In the absence of a disturbance event, it is assumed that the noise in the frequency signal can be modelled by a filtered white noise operation $F(k) = H(q,\theta)e(k)$ where $e(k)$ is a (unknown) white noise sequence and $H(q,\theta)$ is a monic stable and stably invertible discrete-time filter. The standard properties of a white noise are given by zero mean and zero cross-covariance. This allows the parameters of the noise filter $H(q,\theta)$ to be optimized by minimizing the variance of the one step ahead prediction error $\varepsilon(k,\theta) = H(q,\theta)^{-1}F(k)$. A linear parameterization of the filter $H(q,\theta)$ is the Auto Regressive (AR) filter of order n, which allows the prediction error to be written into a linear regression format

$$\varepsilon(k,\theta) = F(k)\varphi(k)\theta, \qquad \varphi(k) = [F(k-1) \dots F(k-n)], \;\; \theta = [a_1 \dots a_n]^T$$

With the linear regression format, minimization of the variance of the one step ahead prediction error can be solved via a standard (Recursive) Least Squares solution [3]. The end result is that the monic discrete-time filter $H(q,\theta)$ can be used to filter of the noisy frequency signal $F(k)$.

5.3 Adaptive filter

Any changes in the white noise properties of $\varepsilon(k,\theta)$ can now be used for real-time detection of events. To facilitate the detection of changes in the properties of $\varepsilon(k,\theta)$, an additional filter operation $d(k) = L(q)\varepsilon(k,\theta)$ can be used where the discrete-time filter $L(q)$ consists of a specially designed (linear) band pass filter. For the definition of a filtered rate of change signal $d(k)$ in our event detection algorithm, the band pass filter is given by the product of two first order filters:

$$L(q) = \frac{1.9}{2}\frac{q-1}{q-0.9}\frac{0.1367q+0.1367}{q-0.7265}$$

For the interpretation of this filter, consider a PMU that provides sampled data at 60 Hz. In that case, the first filter is a standard discrete-time derivative (1st order high-pass filter) with a cut-off frequency of approximately 1 Hz, whereas the second filter is a standard 1st order low-pass Butterworth filter with a cut-off frequency of 3 Hz. The results of this filtering leads to a filtered rate of change (FRoC) signal $d(k)$ that is used for event detection.

5.4 Adaptive Threshold Crossing

The estimated filter $H(q,\theta)$ leads to a white noise one-step ahead predictor $\varepsilon(k,\theta)$ with the smallest possible variance and therefore the FRoC signal $d(k)$ with the fixed filter will have the smallest possible variance. Since the variance of $\varepsilon(k,\theta)$ is known and adapted via the Recursive Least Squares (RLS) estimation, the resulting variance σ^2 of the FRoC signal $d(k)$ is known due to the fixed filter. As a result, the threshold value for event detection on the FRoC signal $d(k)$ can be set to a standard 3σ level, where the value of σ is known and adapted via the RLS estimation of the filter. Even when the filter is estimated only once and not adapted via a RLS, the value of σ is automatically calibrated based on the variance of the FRoC signal $d(k)$. Finally, real-time event detection is performed using a standard 3σ level and the requirement that the FRoC signal must satisfy $|d(k)| > 3\sigma$ for at least *m* subsequent data points to avoid detection of single data point anomalies in the data. The value of *m* is user specified and is typically determined by the effective duration of the impulse response of the filters used in creating the FRoC signal $d(k)$.

6 APPLICATION OF EVENT DETECTION

To illustrate the proposed event detection based on the one step ahead prediction error minimization, followed by adaptive threshold crossing of a filtered rate of change (FRoC) signal, frequency measurements from PMUs located at UCSD and distributed in the WECC during May 30, 2013 from noon till 9pm are used. The PMU data in Figure 6 indicates a major power disturbance event around 4pm but small initial and subsequent events are also present in the data. The proposed event detection algorithm should be able to detect these events automatically.

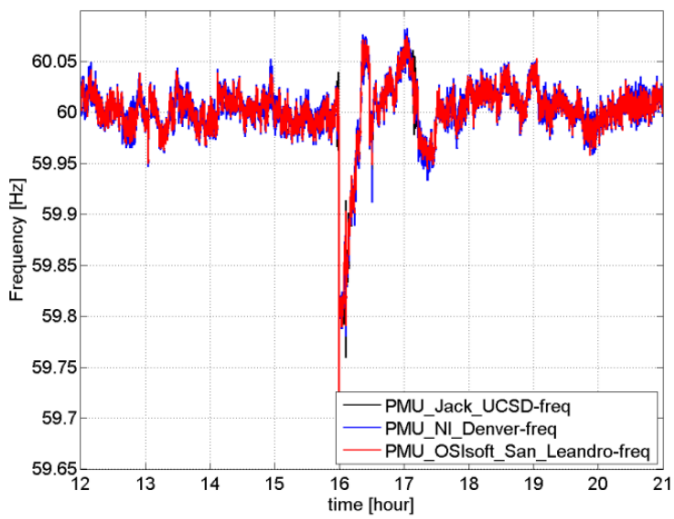

Figure 6 Frequency measurements of 3 different PMUs during May 30, 2013 sampled at 60Hz

Based on initial measurements of the PMU frequency signal $F(k)$ before any power disturbances were present, the parameters θ of the prediction error filter $\varepsilon(k,\theta)$ are calibrated and the resulting variance of the FRoC signal $d(k)$ is estimated. Real-time event detection is performed using the requirement that the FRoC signal must satisfy $|d(k)| > 3\sigma$ for 5 subsequent data points to avoid detection of single data point anomalies in the data. The proposed event detection algorithm marks several events as shown in Figure 7. In addition, the event detection marks the frequency measurements right after the detected event for further processing to quantify the event.

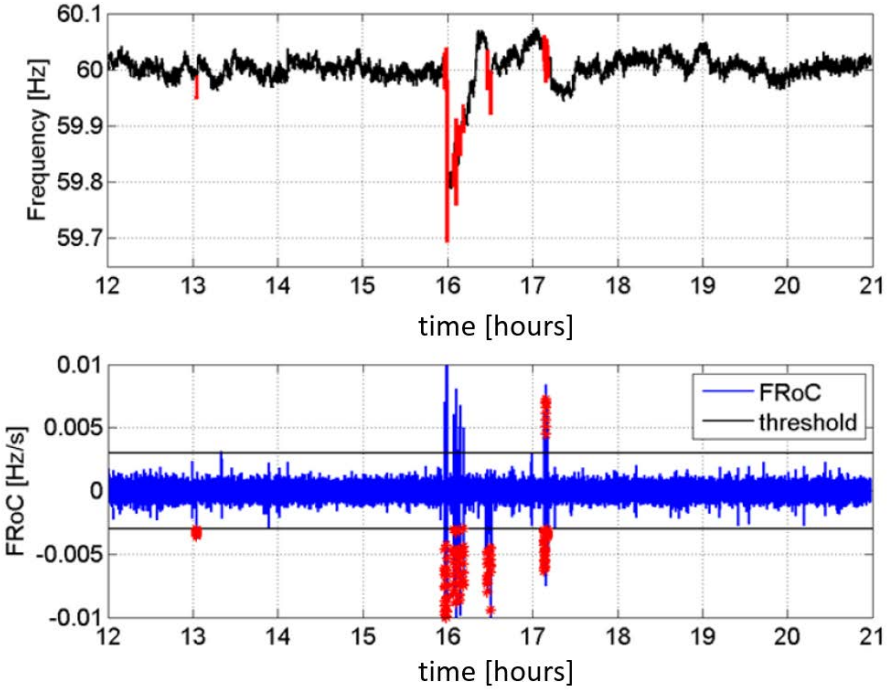

Figure 7: Measured PMU frequency data at UCSD (top) and FRoC signal with estimated threshold (bottom). The red points indicate detected events.

7 CHARACTERIZING POWER OSCILLATION DYNAMICS BY STEP-BASED REALIZATION

Power oscillation are assumed to occur due to a step-wise change in load demand or solar power generation. The size of the load demand may not be known, but the *a priori* knowledge of the step-wise load demand can be exploited to formulate a low order state space model to model the dynamics of any observed power oscillations. In particular, the low order state space model can be realized on the basis of a real-time measurements of three phase real power oscillations to accurately model frequency and damping of the power oscillations. Although the approach is similar to the modal analysis approach in [7], our proposed realization method allows the low order models to be formulated directly on the basis of real-time measurements of power oscillations.

The step-based realization algorithms is implemented as follows. Let $\{y(0), y(1), \ldots, y(N)\}$ be a measured response of an LTI, single-input-multi-output (SIMO) system to a unit-step input applied at $t = 0$ that is corrupted by some possibly-colored measurement noise $v(t)$. To estimate a state space model of the system

$$x(t+1) = Ax(t) + Bu(t)$$

$$y(t) = Cx(t) + Du(t) + v(t)$$

one may proceed as follows:

- Construct the block-Hankel data matrices Y and $\bar{Y}$ and matrices M and $\bar{M}$.
- Construct matrices

$$R = Y - M, \qquad \bar{R} = \bar{Y} - \bar{M}.$$

Then take the singular value decomposition (SVD) of the matrix R.

$$R = [U_n \quad U_s] \begin{bmatrix} \Sigma_n & 0 \\ 0 & \Sigma_s \end{bmatrix} [V_n \quad V_s]$$

An appropriate system order *n* may be found from the range of the singular values in the above equation.

- Given estimates of $\hat{A}$ and $\hat{C}$, let $\hat{B}$ and $\hat{D}$ be the solutions of

$$\hat{B}, \hat{D} = \arg\min \|y - \hat{y}\|_2$$

$$y = \begin{bmatrix} y(0) \\ y(1) \\ \vdots \\ y(N+i) \end{bmatrix}, \hat{y} = \begin{bmatrix} \hat{y}(0) \\ \hat{y}(1) \\ \vdots \\ \hat{y}(N+i) \end{bmatrix}$$

$$\hat{y}(t) = \left[\sum_{k=0}^{t-1} \hat{C}\hat{A}^{t-k-1}\mathbf{1} \right] \begin{bmatrix} \hat{B} \\ \hat{D} \end{bmatrix}.$$

Please refer to [5] for additional details on the step realization method.

8 EVENT MODELING USING STEP-BASED REALIZATION ALGORITHM (SBRA)

8.1 Events created using bump tests

In the experimental verification of the real-time real power demodulation and application of the step-based realization algorithm, power oscillations are induced by step-wise excitation of the auxiliary relay depicted in Figure 4 to switch in a three phase Resistor-Inductor-Capacitor (RLC) circuit to initiate three phase power oscillations in the circuit. The input $u(t)$ is used to denote the digital signal sent to the auxiliary relay; the output $y(t)$ is the real-time demodulated real power calculated by the method proposed in the previous section. In Figure 8, $u(t)$ stepped from 0 to 1 at $t = 0$.

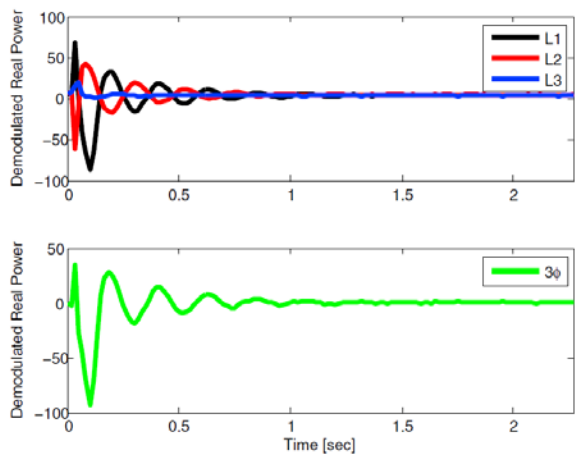

Figure 8 Demodulated real power signal oscillations in each phase (top figure) and three phase (bottom figure) of the RLC circuit induced by a step-wise load change.

If the contactor dynamics is taken into account, a higher-order model can be used to capture these dynamics. As shown in Figure 9, a third-order state space model is realized. The dynamics of the three phase RLC system including the contactor are both captured by the model.

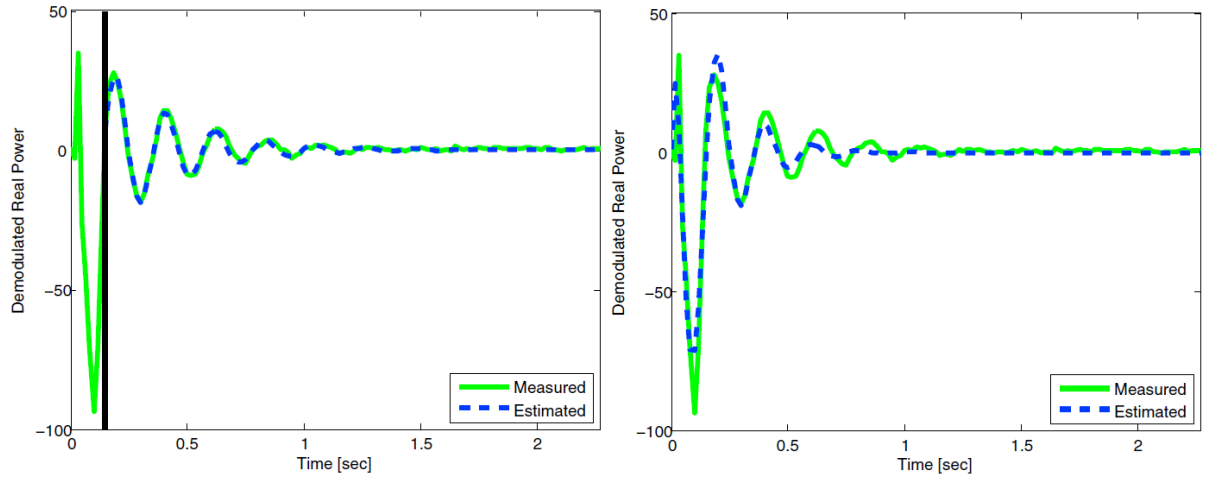

Figure 9 Comparison between measured and modeled/estimated real power oscillation. Left: A second order linear model with the dynamic effect of the contactor excluded in the modeling/estimation. Right: A third order linear model with the dynamic effect of the contactor included in the modeling/ estimation.

8.2 Real power grid events

To illustrate the use of the step-based realization algorithm (SBRA), the time synchronized frequency measurements from the three different PMUs given in Figure 3 are used to quantify the detected event at approximately 4pm. When zooming in on the detected event, the difference in dynamics between the different PMU data can be observed. The SBRA algorithm requires 10 states (5 resonance modes) to accurate capture the oscillation frequencies and their damping coefficients. With the estimated discrete-time state space model the event can be re-simulated and compared with the measured time synchronized frequency measurements from the three different PMUs. The results are depicted in Figure 10, indicating that an excellent fit of the measured data is obtained with a single Multi-Output Ring Down analysis model.

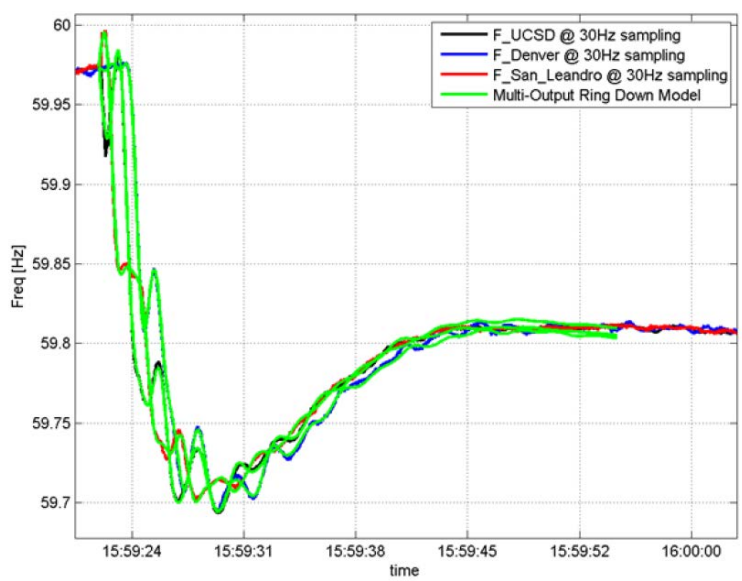

Figure 10 Comparison between PMU data and simulated data based on the estimated discrete-time state space model via the SBRA algorithm for the analysis of the event at 4pm.

9 Conclusions and algorithm

The effectiveness of the approach illustrating both the realization algorithm and the control methodology are illustrated on the measurements obtained from a three phase RLC network where the power oscillation frequency and model order is known and used for comparison and validation of the method. The approach shows how the power oscillation frequency can be recovered from real-time measurements and reduced very effectively with the proposed control algorithm. The approach shows a close connection between modeling power flow dynamics from disturbance data, creating data-based models, and using those model for control design to mitigate electric power oscillations that exploit the fast dynamics and response time of modern inverters.

The next step in the project would have been to implement the control approach on the UCSD microgrid to demonstrate that grid fluctuations can be effectively mitigated with the proposed design. This phase of the project could not be completed due to cybersecurity issues and time constraints. Between the proposal writing and contracting and the active period of the grant, several incidents occurred on the UCSD microgrid where outside parties attempted to gain access to critical electrical infrastructure. Such access could potentially cause microgrid outages and/or damage electric components. As a result much more stringent cybersecurity policies have been put in place that essentially prohibit anything except data sharing on the UCSD microgrid. Projects such as this where network-connected hardware would take actions that manipulate power flow are no longer feasible in the current cybersecurity environment. While policies may be relaxed after increased cybersecurity is in place, the time constraints of the contract did not allow for associated delays. Therefore this part of the task had to remain incomplete and the associated funding was not consumed.

BIBLIOGRAPHY

[1] Zhou, N., et al, “Automatic Implementation of Ringdown Analysis for Electromechanical Mode Identification from Phasor Measurements”, Proc. IEEE Power and Energy Society, 2010.

[2] Tashman, Z., Khalilinia, H., Venkatasubramanian, V. “Multi-Dimensional Fourier Ringdown Analysis for Power Systems Using Synchrophasors, IEEE Trans. on Power Systems, Vol. 29, No. 2, pp. 731-741, 2014.

[3] Ljung, L. “System Identification: Theory for the User”, Prentice Hall, 1999.

[4] Hauer, J.F., Demeure, C.J., Scharf, L.L. “Initial results on Prony analysis of power system response signals” IEEE Trans. on Power Systems , Vol. 5, No. 1, pp. 80-89, 1990.

[5] Miller, D.N. and de Callafon, R.A., “Identification of Linear Time-Invariant Systems via Constrained Step-Based Realization”, 16th IFAC Symposium on System Identification, pp. 1155-1160, 2012.

[6] De Callafon, R. and Wells, C. (2014), “Distributed real-time electric power grid event detection and dynamic characterization”. In Proc. of CIGRE US National Committee 2014 Grid of the Future Symposium.

[7] Rogers, G. (2000).Power System Oscillations.Springer US, Boston.