High Penetration Solar Forum

March 2011

U.S. DEPARTMENT OF ENERGY | Energy Efficiency & Renewable Energy

Field Verification of High-Penetration Levels of PV into the Distribution Grid with Advanced Power Conditioning Systems

Dr. Jason Lai
Virginia Tech
Future Energy Electronics Center
106 Plantation Road
Blacksburg, VA 24061-0356

Outlines

- Introduction
  - Project Sponsors and Partners
  - Focus Areas
  - Key Deliverables
- Technical Areas
  1. Solar Energy Production with Different PCS Configurations
  2. PCS Design Issues
  3. OpenDSS Modeling
  4. Power Quality Compliance Testing
- Q&A

Project Sponsors and Partners

Sponsor: Department of Energy

U.S. DEPARTMENT OF ENERGY | Energy Efficiency & Renewable Energy

Partners:

Virginia Tech
Blacksburg, VA

EPRI ELECTRIC POWER RESEARCH INSTITUTE
Knoxville, TN

University of Texas
Austin, TX

Focus Areas

- BOS cost & installation efficiency (MYPP08-12, p. 26)
- Grid stability, voltage regulation, and power quality with high PV penetration (MYPP08-12, pp. 38-39)
- Protection and coordination with PV inverters (MYPP08-12, pp. 38-39)

MYPP: DOE Multi-Year Program Plan

Key Deliverables

- **Demonstration of PV power conditioners from different manufactures and of different capacities (micro, centralized and hybrid).**
- **VT in-house developed power conditioning system prototype DC-DC-AC (DDA) operating in islanding and grid-tied conditions.**
- **PV resource and PCS (Power Conditioning System) modeling with EPRI OpenDSS.**

Technical Area 1: Solar Energy Production with Different PCS Configurations

- Different PCS Configurations
- VT-FEEC Solar House Energy Production Study with Three PCS Configurations
- FEEC Solar Energy Production with Three PCS Configurations
- PCS Power Outputs and Irradiance Level
- PCS Startup in the Morning
- PCS Output Under Frequent Cloud Movement

Typical PV-PCS Configurations

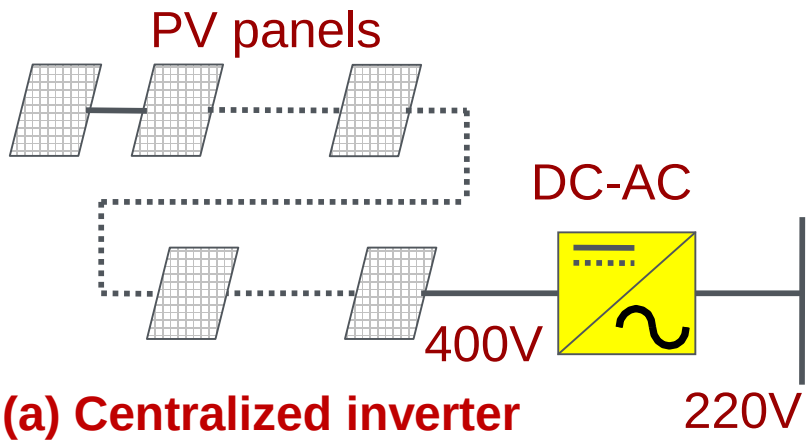

(a) Centralized inverter

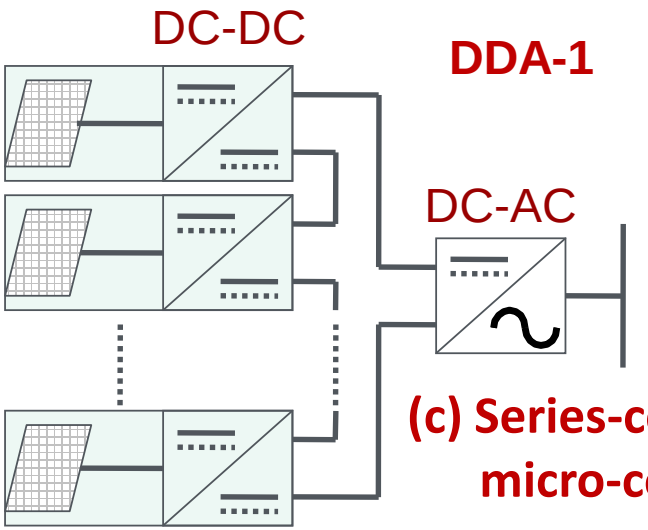

(c) Series-connected micro-converters

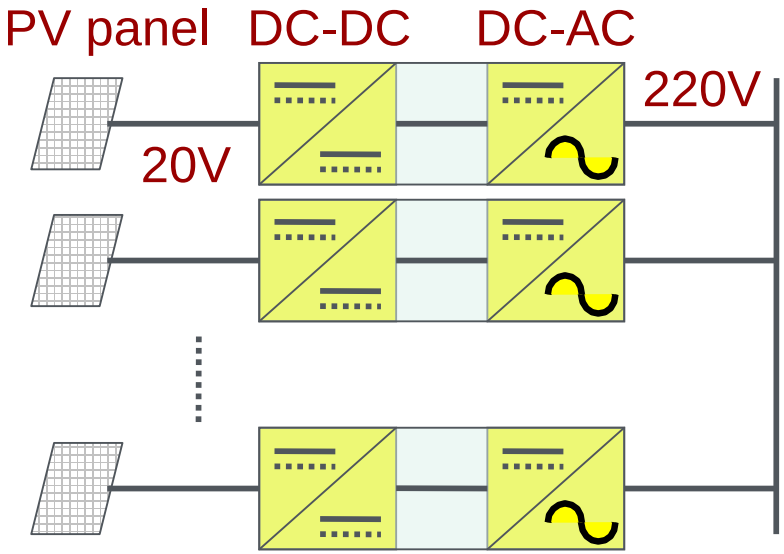

(b) Micro-inverter

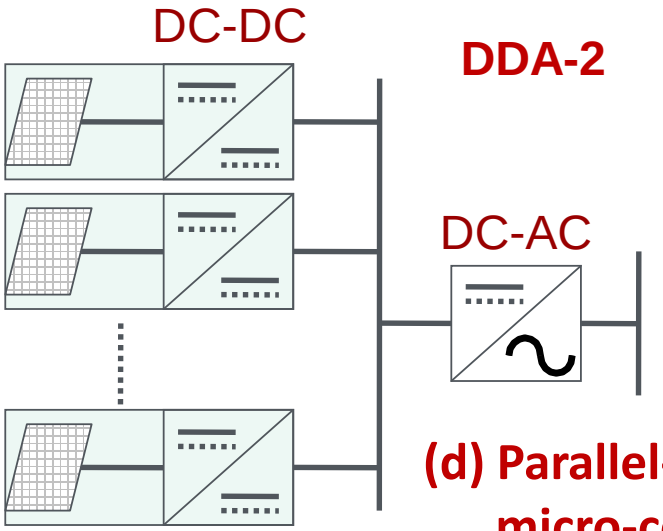

(d) Parallel-connected micro-converters

VT-FEEC Solar House Energy Production Study with Three PCS Configurations

Data loggers record following information

- **Irradiance**
- **Temperature**
- **Voltage**
- **Current**
- **Active power**
- **Reactive power**
- **Power factor**
- **Real energy**
- **Reactive energy**

78 PV panels, rated 75W each, are configured for three PCS systems

- SunnyBoy (SB5000US) inverter (1 unit)
- SolarMagic (SM3320) micro-converter (13 units) + SunnyBoy inverter (1 unit)
- Enphase (M190-72-240) micro-inverter (13 units)

VT Solar House PCS Configuration

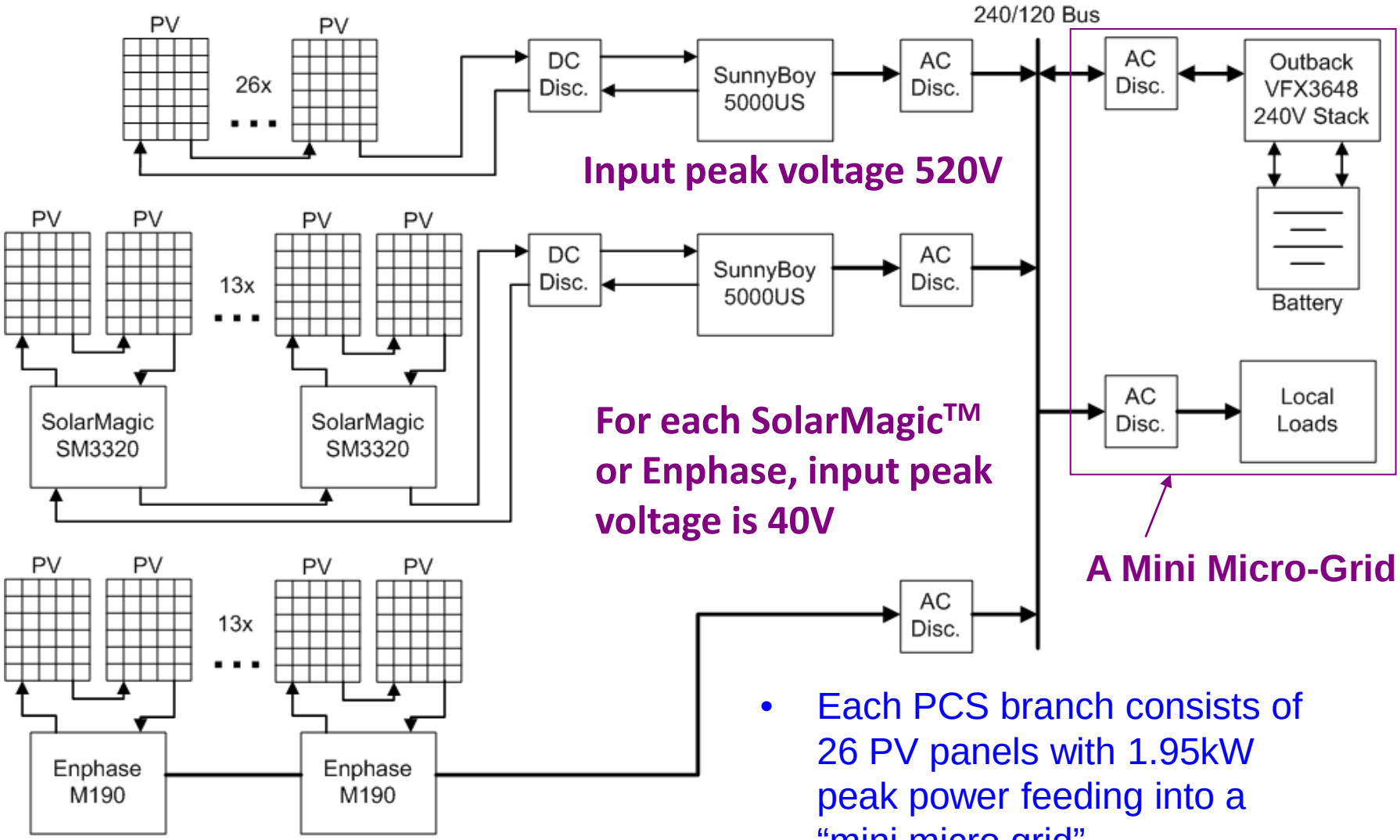

- Each PCS branch consists of 26 PV panels with 1.95kW peak power feeding into a "mini micro grid"

FEEC Solar Energy Production with Three PCS Configurations Shown on Google PowerMeter™

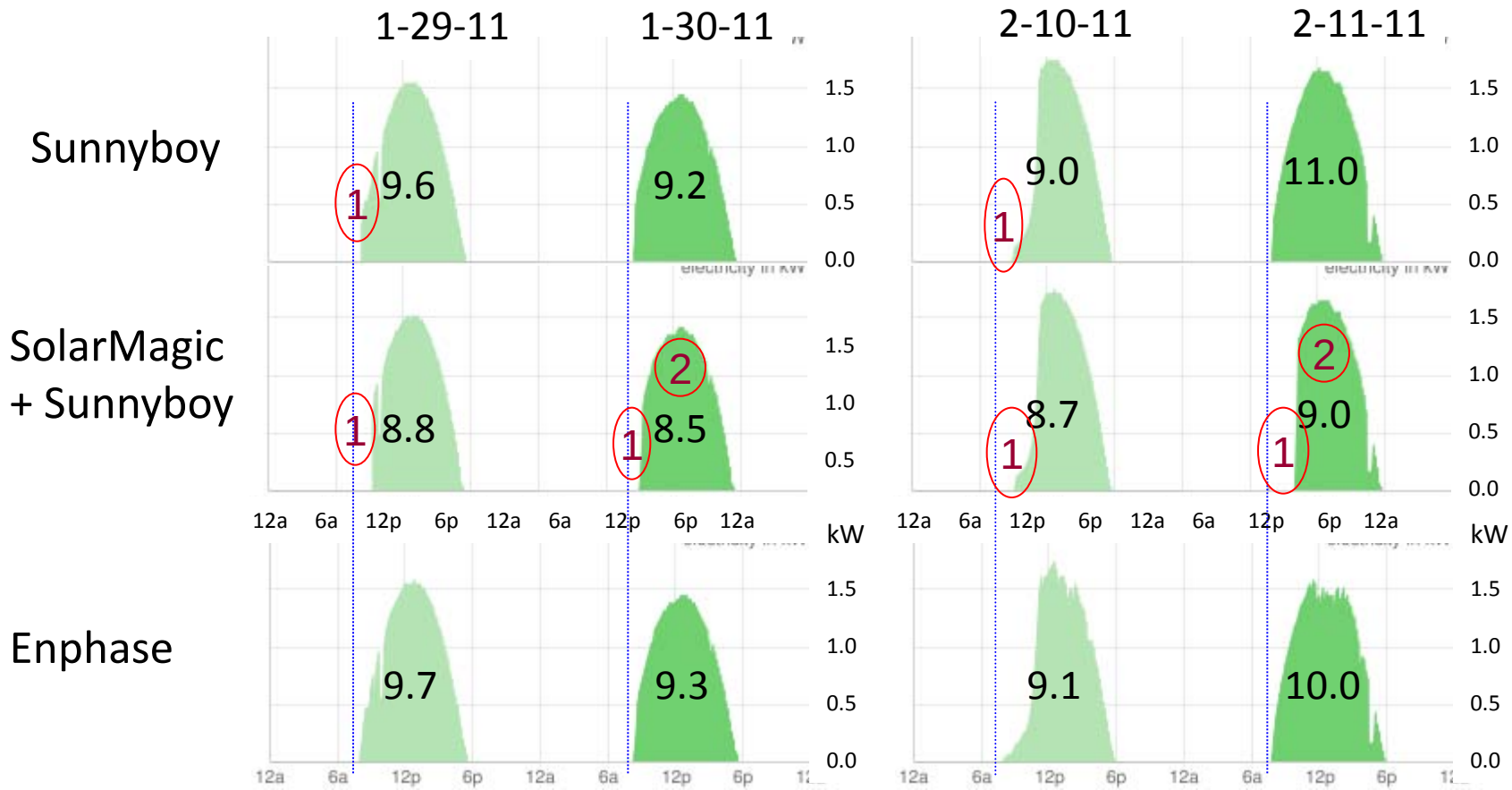

PCS design can impact energy production with following factors:

(1) Morning startup (reconnection)

(2) PCS efficiency

PCS Power Output and Energy Production

(01/30/2011, Mostly Sunny, 63 F Peak)

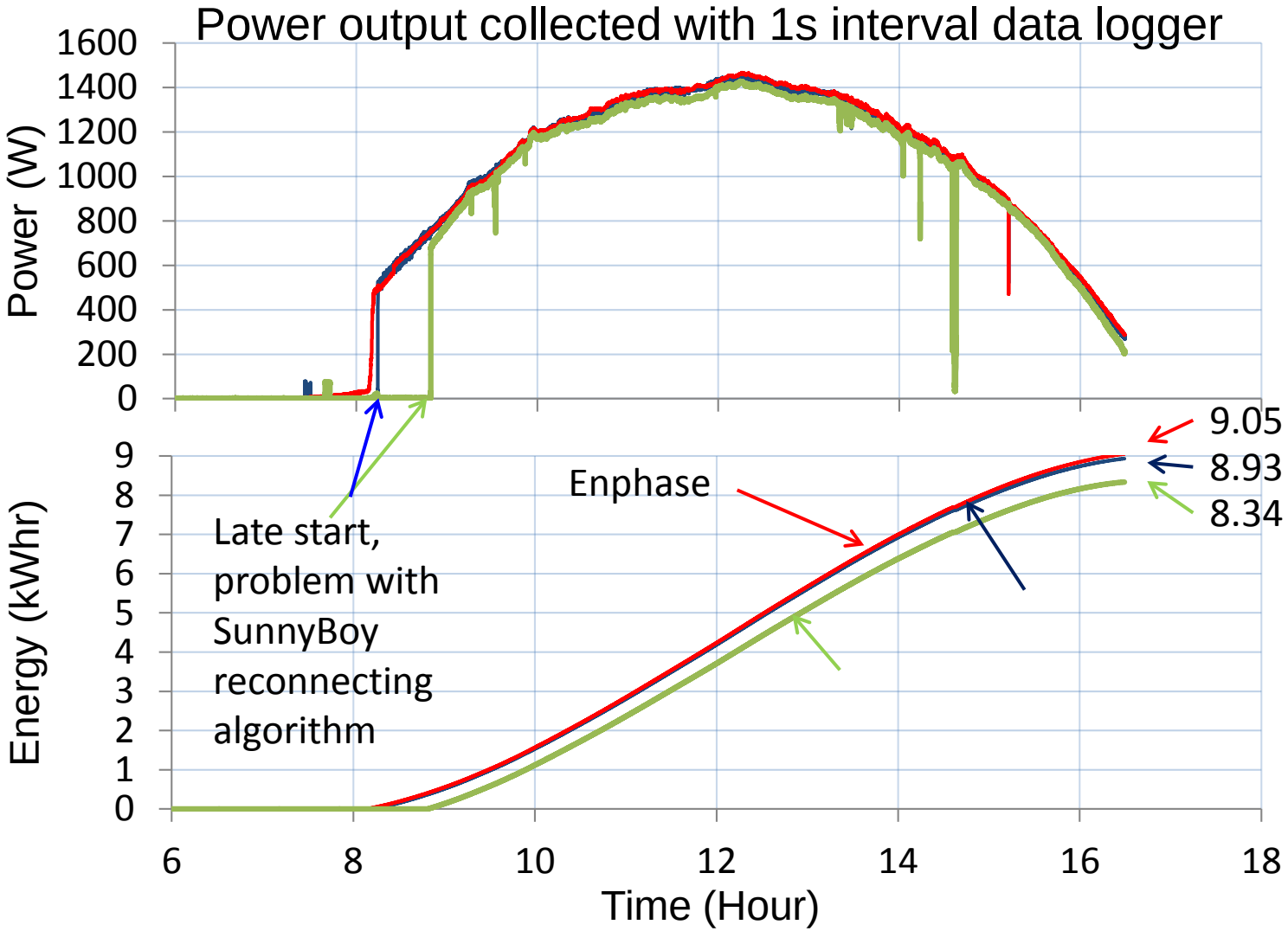

PCS Power Outputs and Irradiance Level

(7:00–11:50am, 02/08/2011, Total about 5 hours)

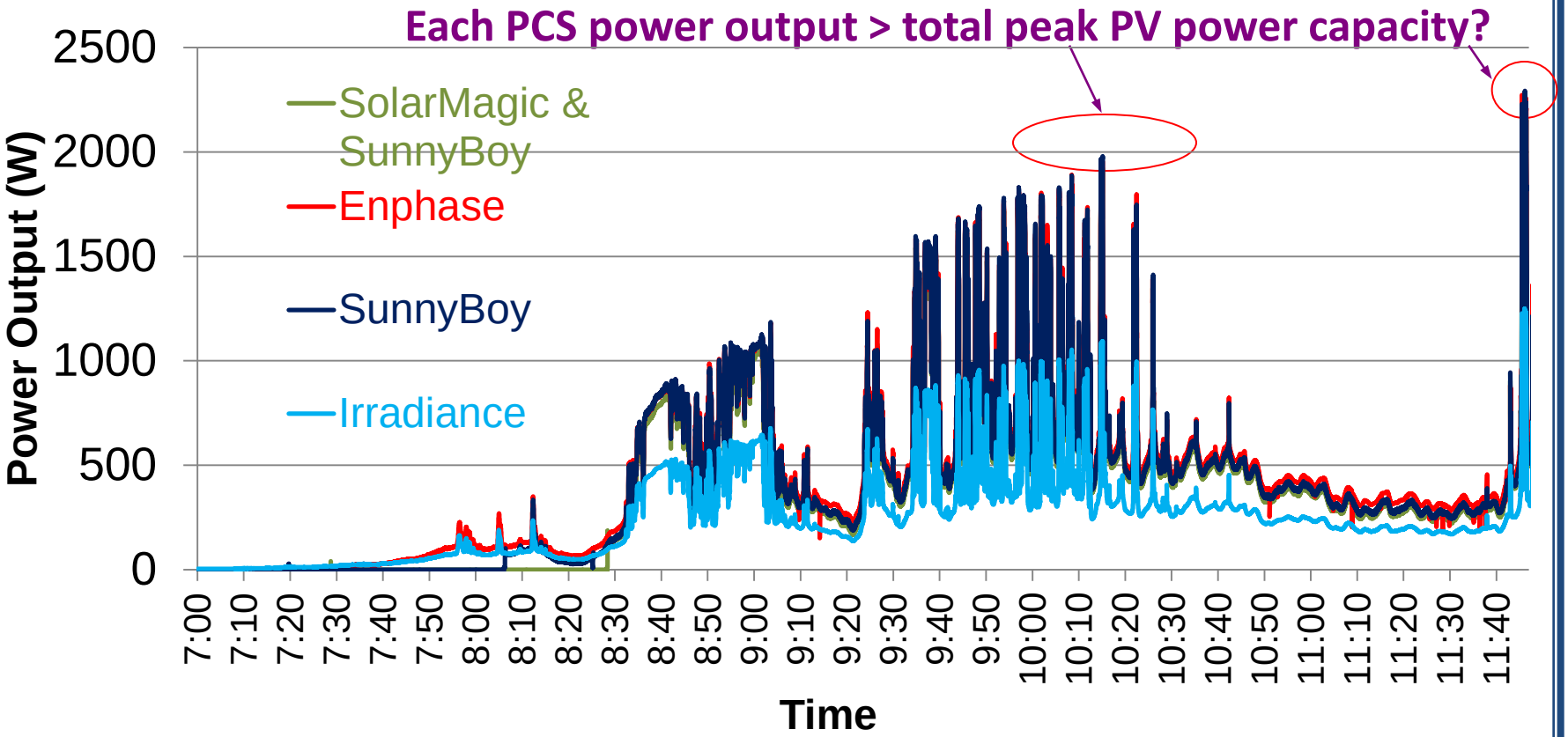

- **Power Integration from 8:28 AM to 11:48 AM**
- **Micro Inverter = 1.928 kWh (100%)**
- **Centralized Inverter = 1.835 kWh (95%)**
- **Series DC-DC & Centralized Inverter = 1.743 kWh (90%)**

PCS Startup in the Morning

(7:00–8:30am, 02/08/2011)

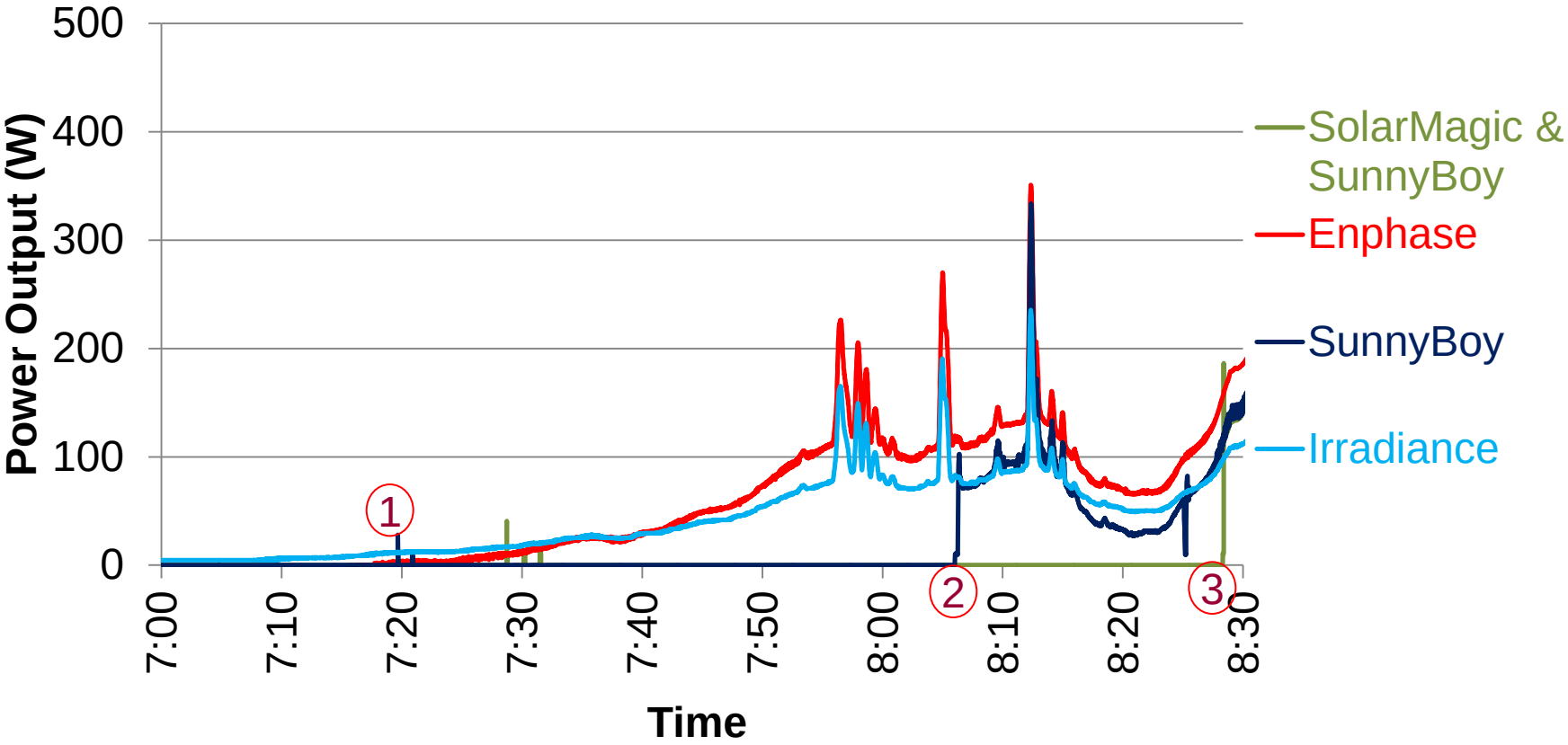

(1) Micro Inverter Starts 7:20 AM
(2) Centralized Inverter Starts 8:05 AM
(3) Series DC-DC & Centralized Inverter Starts 8:30 AM

PCS Output Under Frequent Cloud Movement

(11:45–11:47am, 02/08/2011, Total 2 minutes)

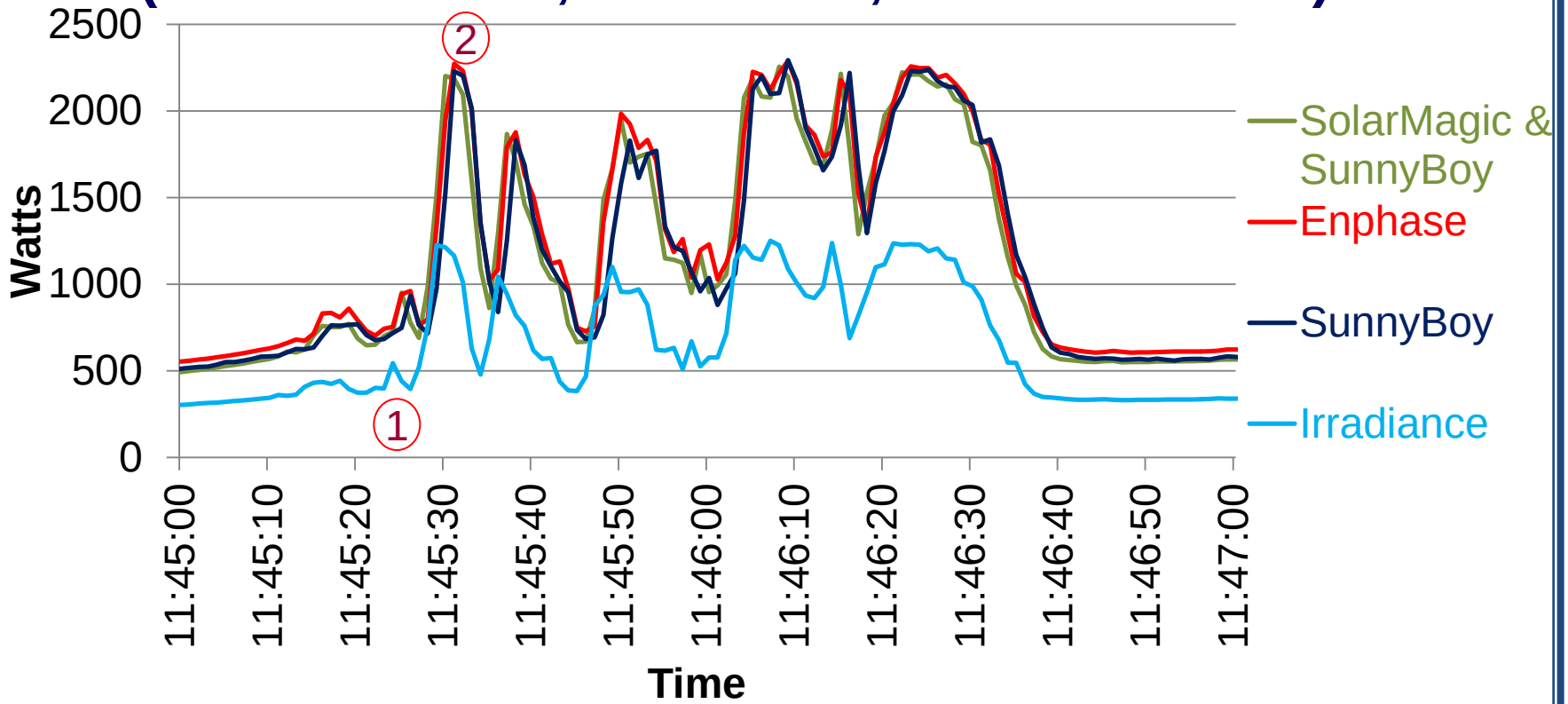

- **PCS outputs from (1) 35% to (2) 113% of rated PV power in 3 seconds**
- **1-second data logging is insufficient to determine true ramp rate**
- **PCS configuration has almost no effect on power ramp-rate**
- **PCS peak power needs to be sized higher than PV peak power**
  ➔ against traditional thinking (Note: manufacturer recommends 190W PCS for 230W PV)

Statistic Energy Production over 3-Week Period

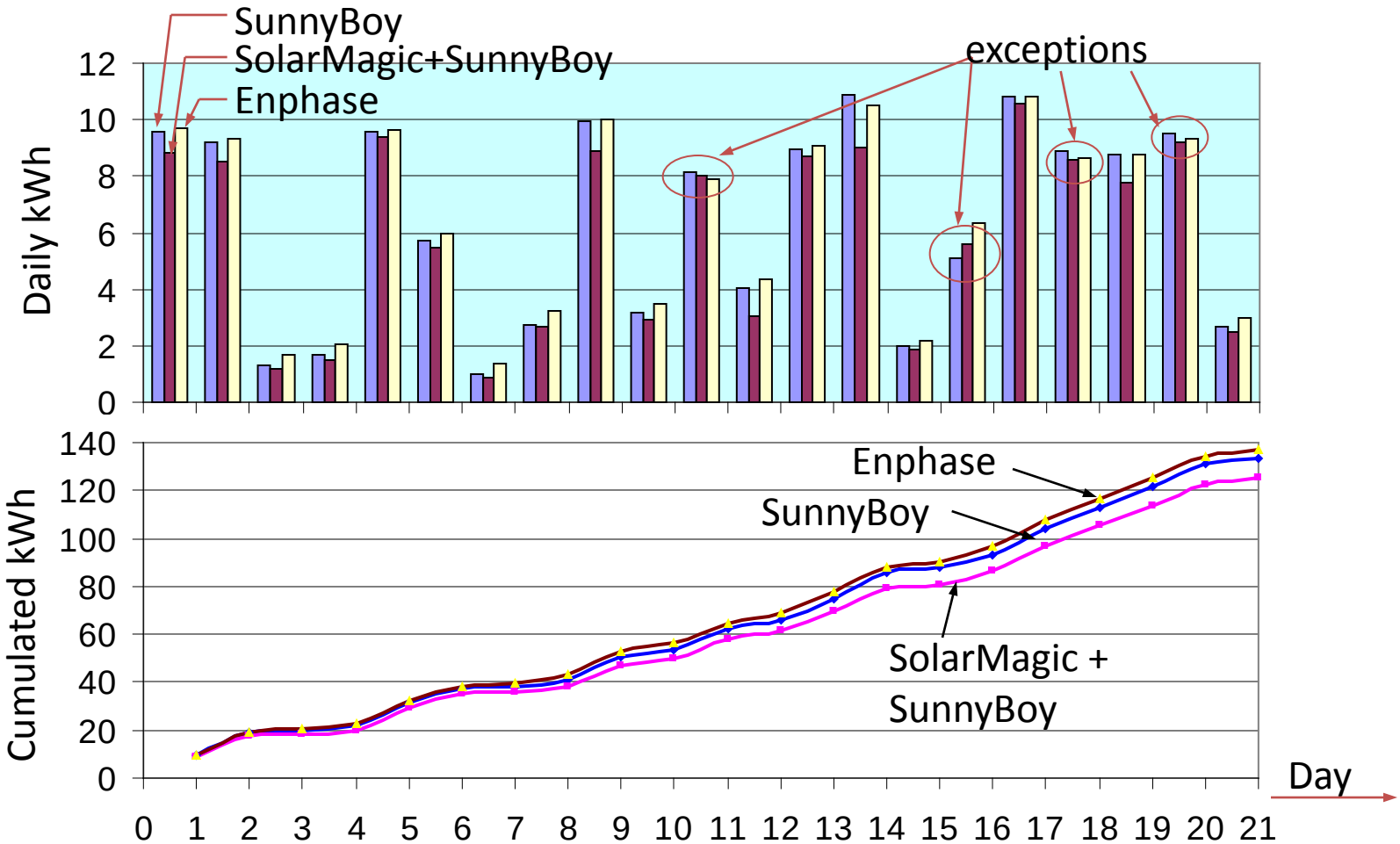

- **In general, the Enphase inverter produces more energy. A few exceptions are observed, which are most likely caused by the cloud.**
- **The SunnyBoy inverter normally produces more energy then SolarMagic + SunnyBoy. One exception is observed, which is due to late reconnection of the inverter.**

Summary of Technical Area 1 on PCS Configurations

- Micro-inverter based PCS generally gain more energy production in the test case, but it's due to the efficiency of the PCS and how quickly it "reconnects" in the morning and after shading.

➔ **More cost-effective PCS design is possible.**

- Due to irradiance transient overshoot after shading, PCS needs to handle more power than the rated PV peak power.

➔ **Existing recommendation of sizing PV 20% larger than PCS capacity needs to be "reversed."**

- Monitoring with 1-second interval is insufficient to determine the ramp rate during frequent cloud transients.

➔ **More precision monitoring and data logging are needed.**

Technical Area 2: PCS Design Issues

- **Single-stage versus two-stage PWM designs**
- **Evaluation of different PV PCS designs and their features on**
  - **efficiency,**
  - **waveform quality,**
  - **hot spot temperature.**

Block Diagram of Typical PV-PCS Designs

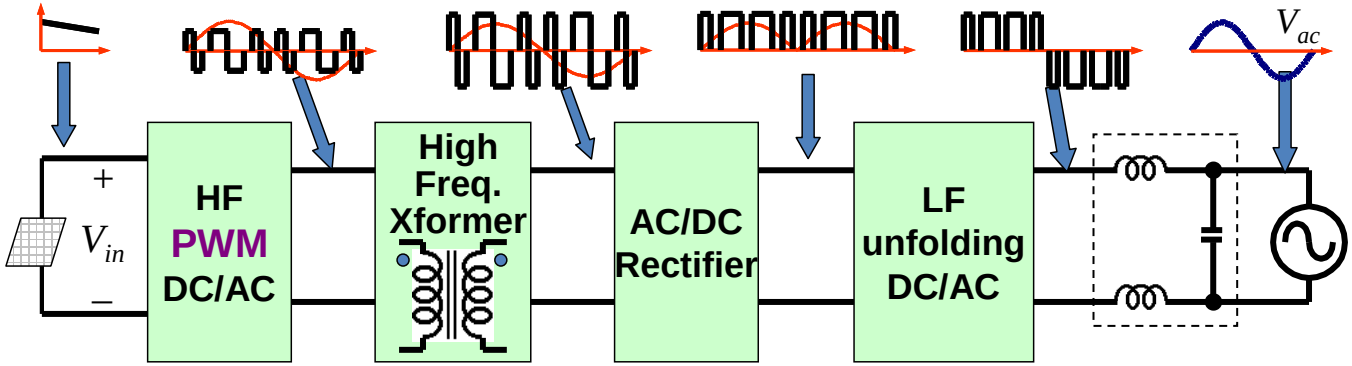

(a) Single PWM stage type, no high voltage energy storage, e.g. Enphase

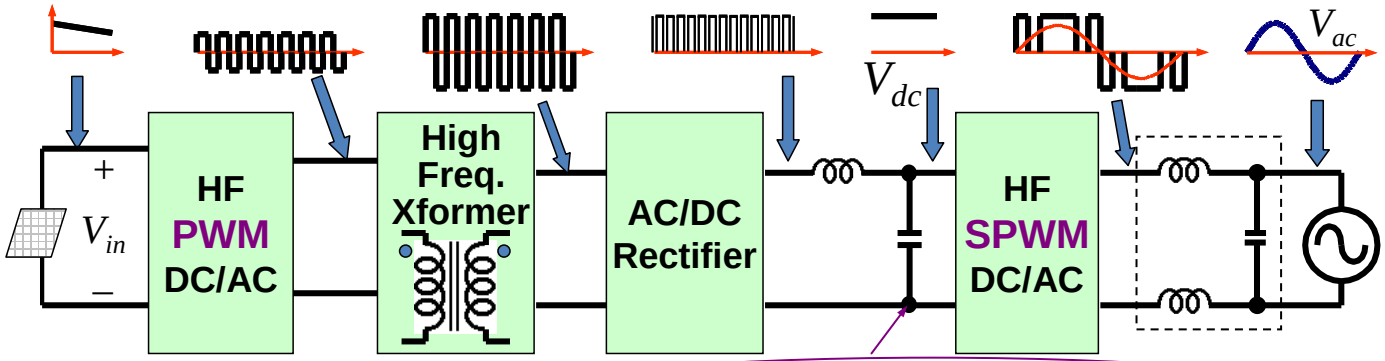

(b) Two-PWM stage type, with high voltage DC bus and energy storage, e.g. ExcelTECH

- Single PWM stage is generally more efficient, but requires large storage capacitor at the input to stabilize MPPT
- Two PWM stages mean more costly components and higher switching loss, but the system allows high voltage DC bus to absorb 120Hz ripple and thus eliminating electrolytic capacitor

Evaluation of Commercial PCS – SunnyBoy SB5000US Centralized Inverter

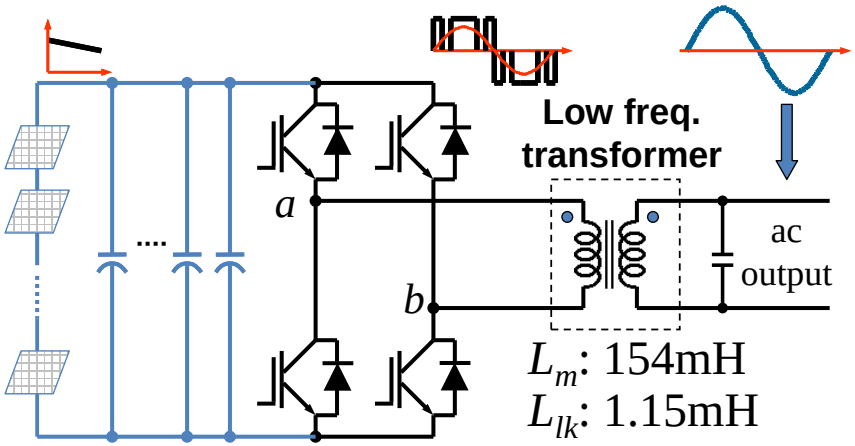

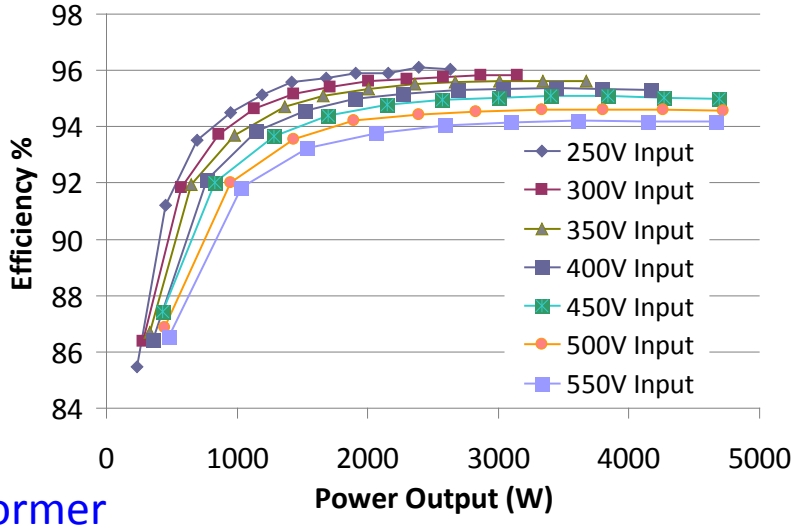

- Circuit topology: Full-bridge inverter + transformer
- A large capacitor bank, more than 30 electrolytic capacitors, is connected across PV array
- Two switches are switched at 16kHz PWM frequency
- Two switches are switched at 60Hz line frequency to reduce switching loss

Features:

- Continuous operation under light load (<10W), no burst mode
- Grid relay only trips on DC bus under-voltage condition, not power level
- Approx. 2% efficiency drop from low-line to high-line input; reduced efficiency at higher voltages due to the increased switching and magnetic losses.

PCS Efficiency and Hot Spot Temperature

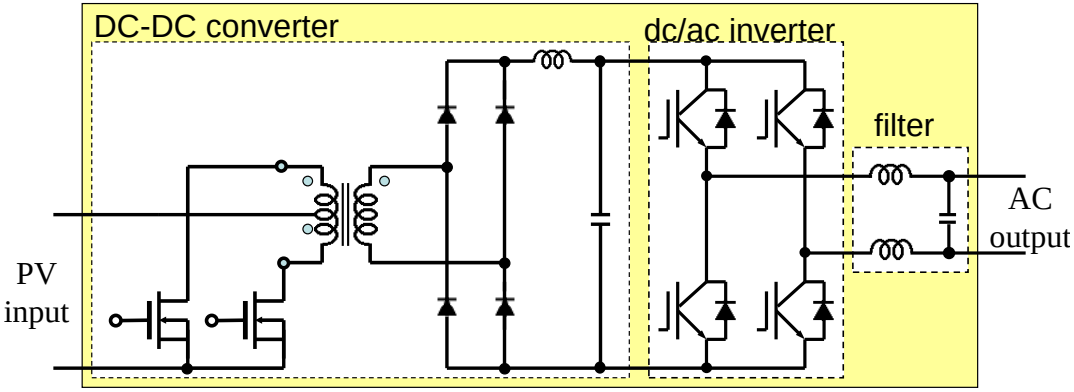

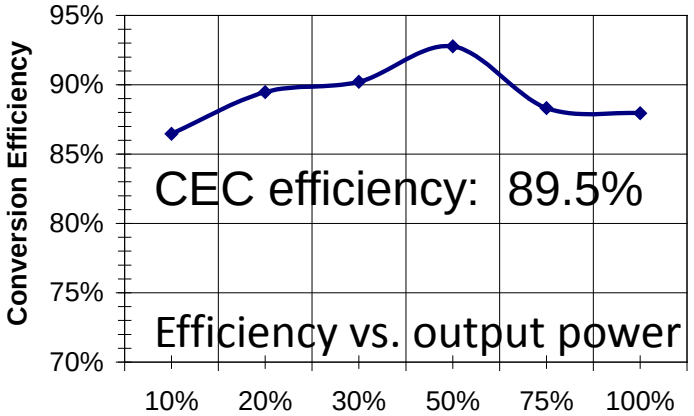

- Circuit topology: Push-pull DC-DC converter + Full-bridge DC-AC inverter
- DC-DC converter in 26 kHz hard-switching PWM
- DC-AC inverter in 30 kHz hard-switching sinusoidal PWM

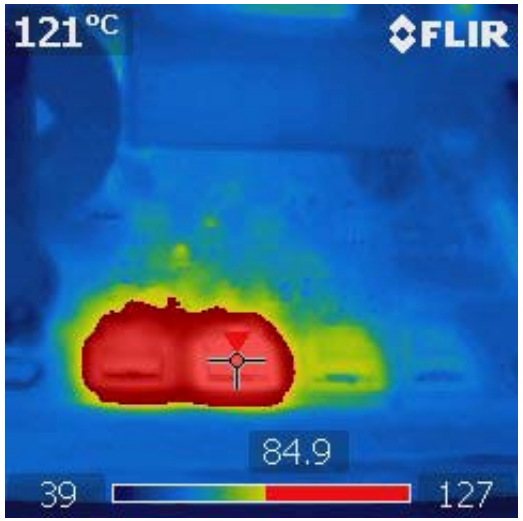

Hot spot temperature: 121 C

Key Design Features:

- Compact footprint
- Good waveform fidelity, low THD, good power factor
- Two-stage power conversion, poor overall efficiency
- High heat sink temperature rise (96°C)
- Concern on the life span of electrolytic capacitors

Hot Spot Temperature Reduction with Improved PCS Efficiency

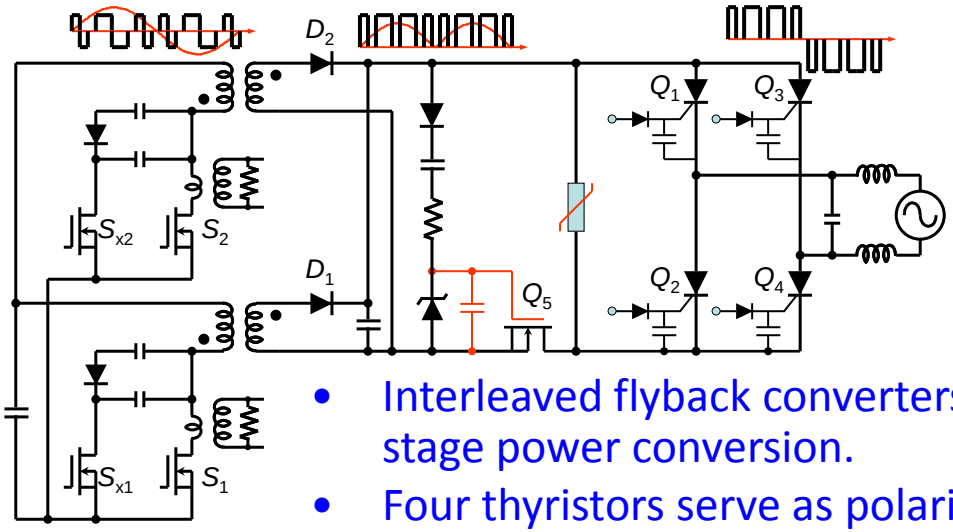

- Interleaved flyback converters serve as single-stage power conversion.
- Four thyristors serve as polarity selection switches.
- High voltage MOSFET helps commutate thyristors under low dc bus voltage condition.

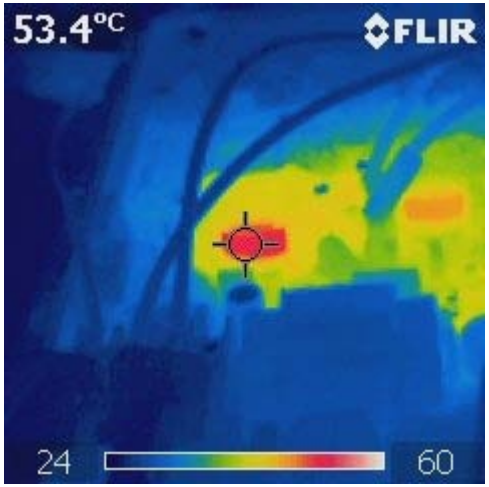

Hot spot temperature: 53 C

Key Design Features:

- Single-stage power conversion, good overall efficiency
- Good waveform fidelity, low THD
- Burst mode operation at load below 30% of rated power
- High CEC efficiency, 94%
- Low heat sink temperature rise (30°C)
- Concern on the life span of electrolytic capacitors

Virginia Tech Micro-converter and Micro-inverter

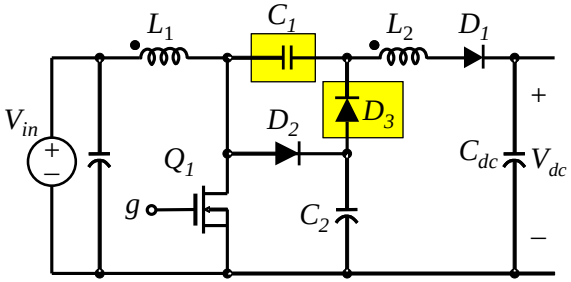

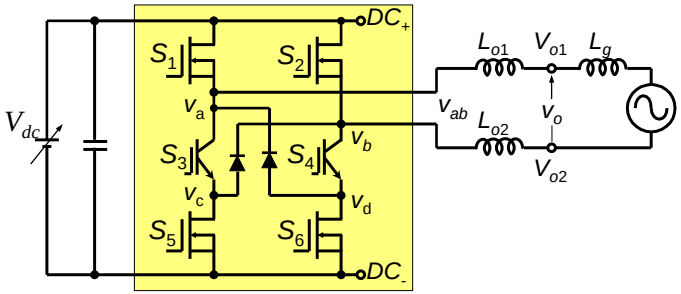

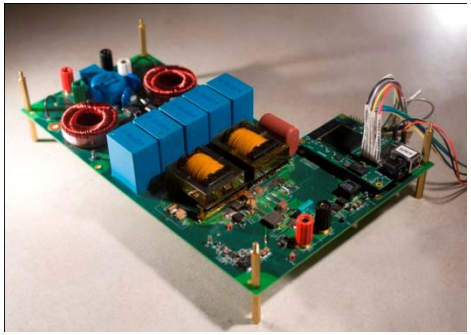

- Novel high boost ratio DC-DC converter
- H6 inverter for high efficiency and elimination of ground loop current

Key Design Features:

- Wide input voltage range, 15 to 70V
- No "electrolytic capacitor"
- High efficiency, >96% CEC efficiency at 40V
- Fast control loop is designed to reject 120-Hz ripple back to PV ➔ Maximum power point tracking (MPPT) does not fluctuate.
- The MPPT responds quickly under transient condition with shading effect.

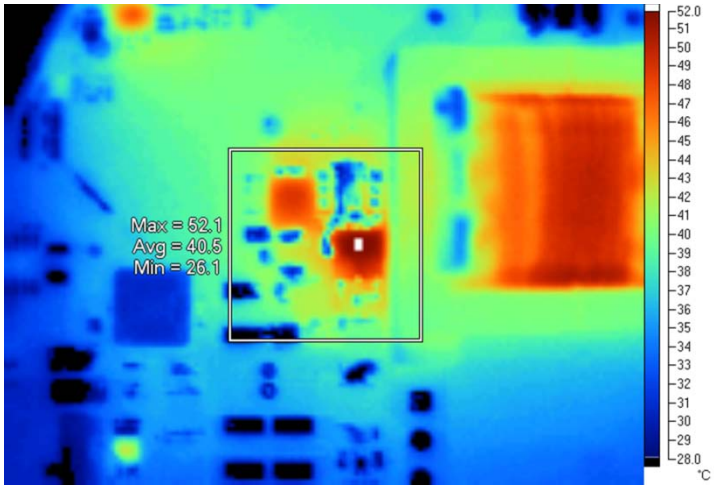

Hot spot temperature: 52 C

Summary of Technical Area 2 on PCS Design

- Single-stage power conversion design is generally more efficient, but it requires large electrolytic capacitor to avoid inefficient MPPT

➔ **Room for PCS design improvement with two-stage design.**

- Measurement shows hot spot temperature is highly related to PCS efficiency.

➔ **High efficiency PCS design is desirable for reliability concerns, not just for energy harness.**

- PCS input voltage affects the power conversion efficiency. Low input voltage is more efficiency for centralized inverter.

➔ **Selecting proper PV voltage level is crucial for the tradeoff of energy production and PCS reliability.**

- Light-load burst mode operation tends to increase the efficiency.

➔ **Need further investigation under high penetration cases.**

Technical Area 3: OpenDSS Modeling

- **Brief Introduction of OpenDSS**
- **Complete Solar PV System Modeling under OpenDSS Simulation Platform**
- **PV-PCS Model Validation with Actual Measurement Data**
- **Use of Developed Model for High Penetration PV System Volt-Var Control Simulation Study**
- **EPRI Distributed PV (DPV) Program**

Simulation Platform -- OpenDSS

- Open source of EPRI's Distribution System Simulator
  - developed in 1997
  - open sourced in 2008 to collaborate with other research projects
- Used in 100's of distribution studies
- OpenDSS designed from the beginning to capture
  - Time-specific benefits **and**
  - Location-specific benefits
- Differentiating features
  - full multiphase model
  - numerous solution modes
  - "dynamic" power flow
  - system controls
  - flexible load models

- Needed for analysis of
  - DG/renewables
  - energy efficiency
  - PHEV/EV
  - non-typical loadshapes

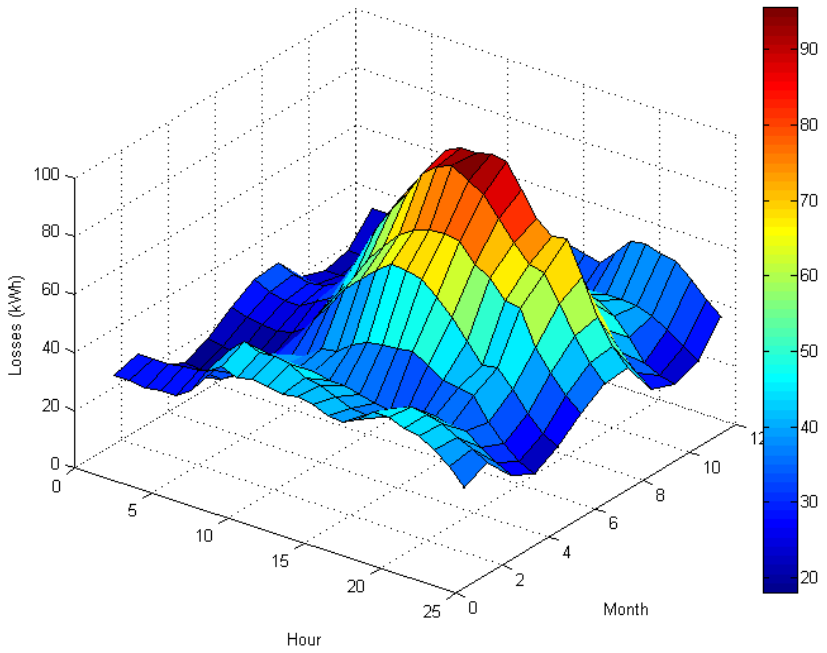

Complete Solar PV System Modeling under OpenDSS Environment

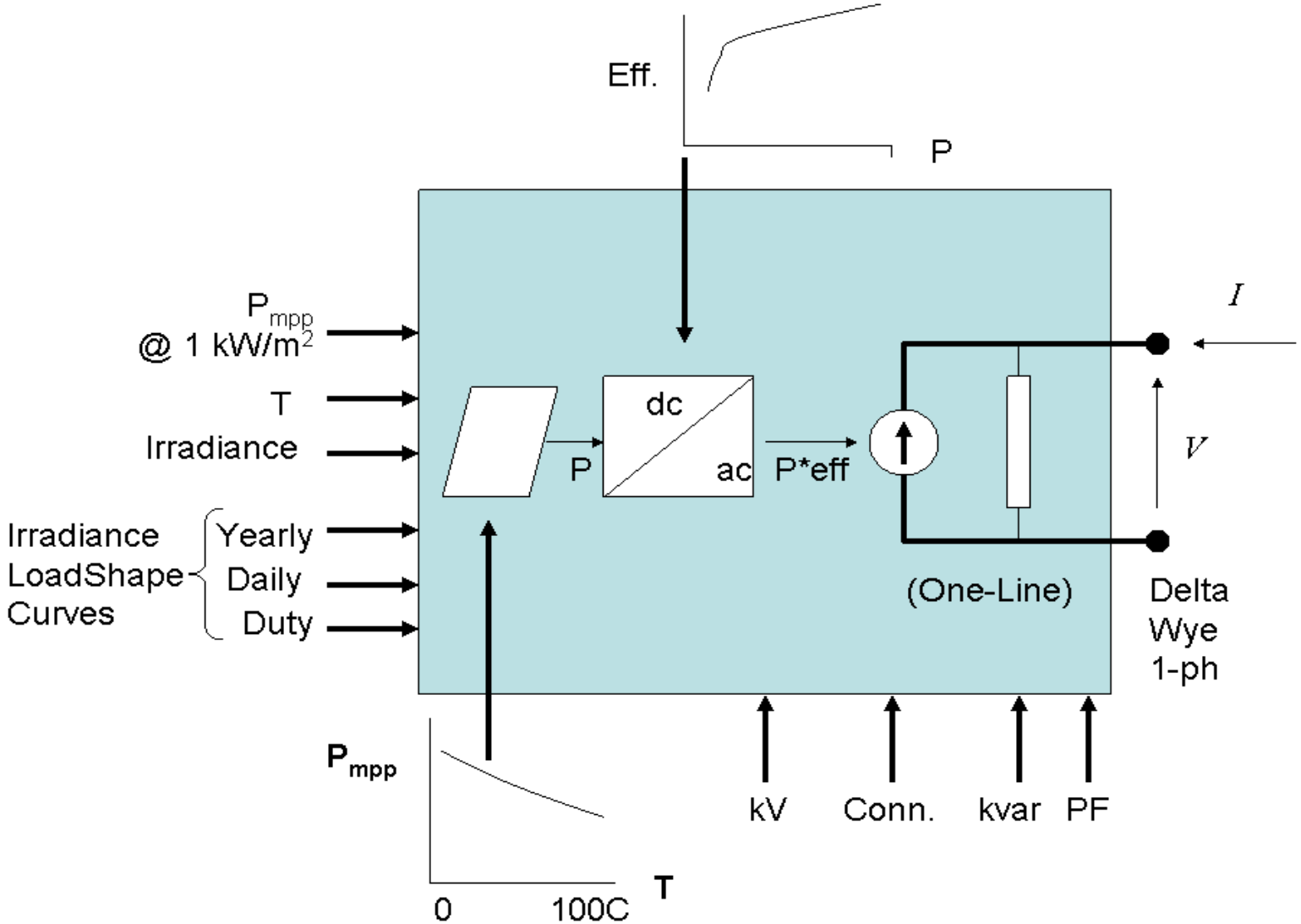

Model Data and Usage

- Allows for simulation of vendor-specific inverter characteristics
  - Efficiency
  - Cut-in/cut-out
  - Fault response
  - Var control
  - Harmonics
  - Single-phase and three-phase
- Output variability can be modeled using measured
  - Irradiance
  - DC power
  - AC power
- Model fidelity allows for simulation of grid impacts
  - Voltage regulation
  - Voltage fluctuations
  - Voltage unbalance
  - Fault current contribution
  - harmonics
- Model allows for
  - Daily/weekly/yearly simulations
  - High penetration scenarios
  - Small-scale and large-scale PV

Measured Data for Model Validation

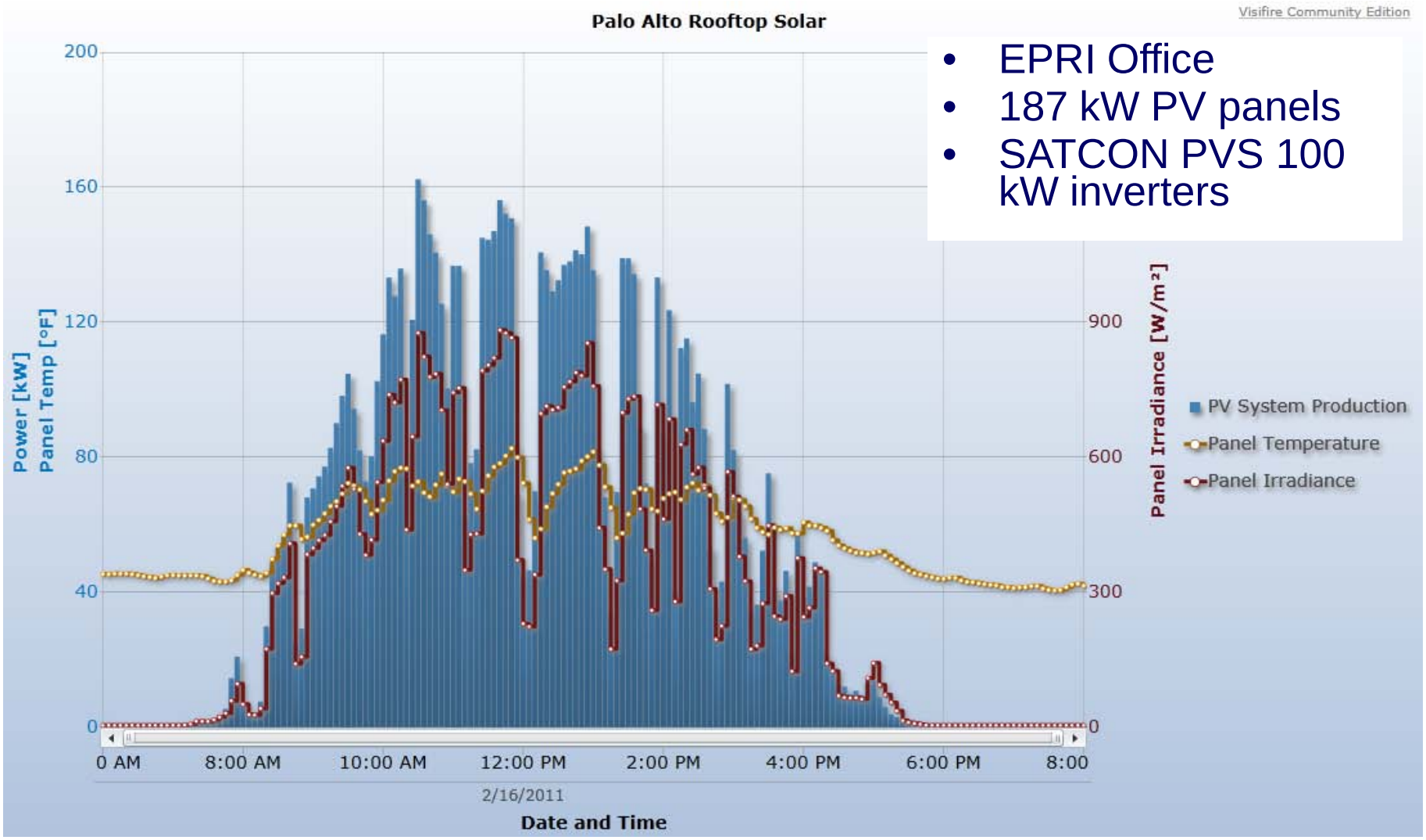

- EPRI Office
- 187 kW PV panels
- SATCON PVS 100 kW inverters

Measured PV Inverter Output vs OpenDSS Model Simulation Results

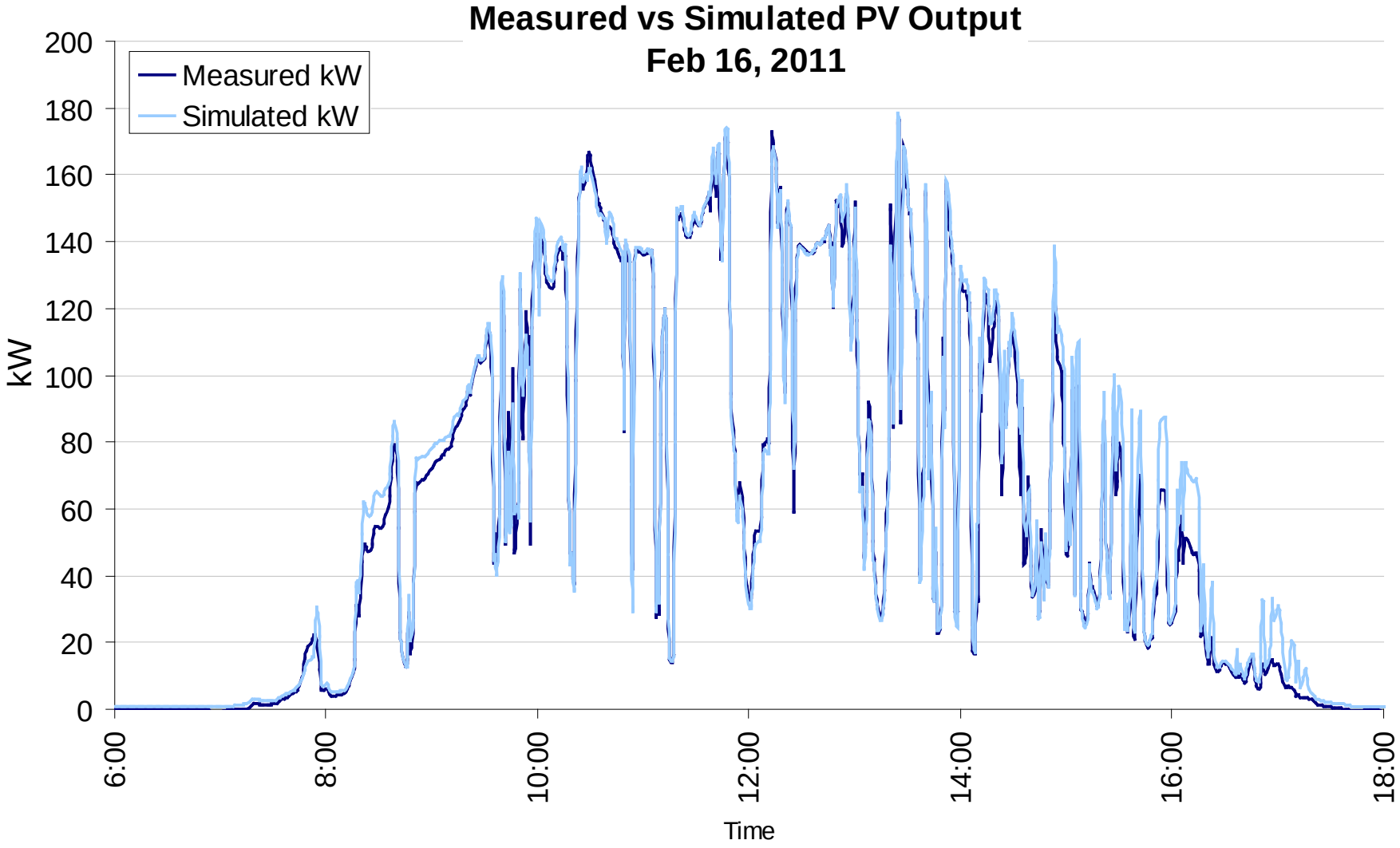

Model Usage: Steady-State Analysis

- Worst-case
  - overvoltage
  - voltage fluctuations
  - Thermal loading
  - Harmonics
  - Fault current

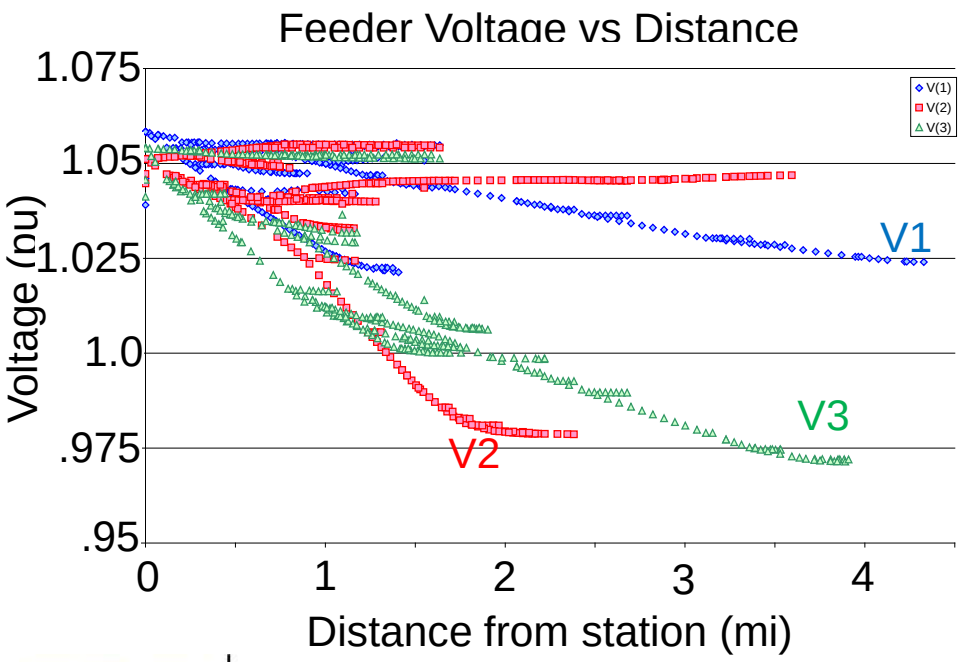

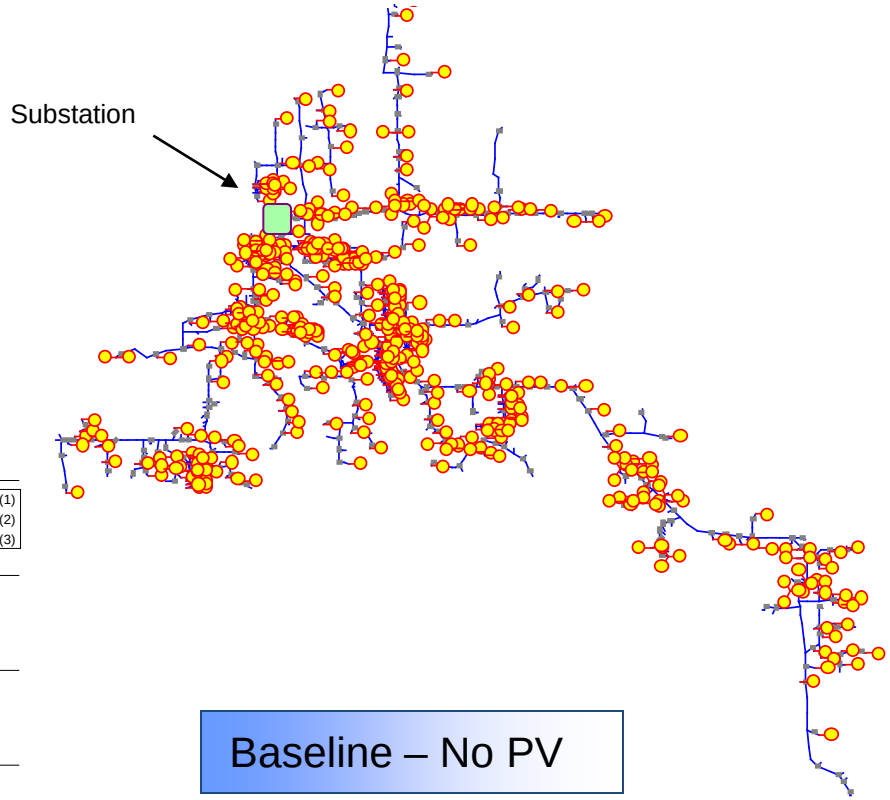

Baseline – No PV

20% PV (600 kW)

30% PV (900 kW)

50% PV (1500 kW)

…..

Model Usage: Time Series Analysis - How Does PV Interact with Grid Over Time

- Use high-resolution time-coincident data of feeder load and local PV measurements to develop unique solar profiles for each PV generator in the model
- Daily/weekly/yearly simulations at seconds-minutes-hours timeframe
  - how fast voltage really changes due to PV
  - Increased duty on
    - feeder regulators
    - LTCs
    - cap bank switching
- Advanced voltage control capability
  - Volt/var control

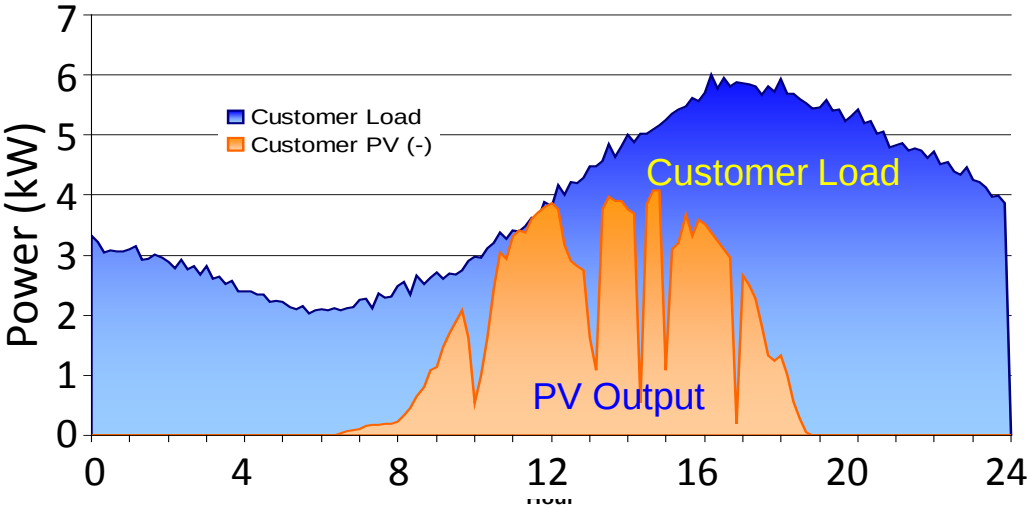

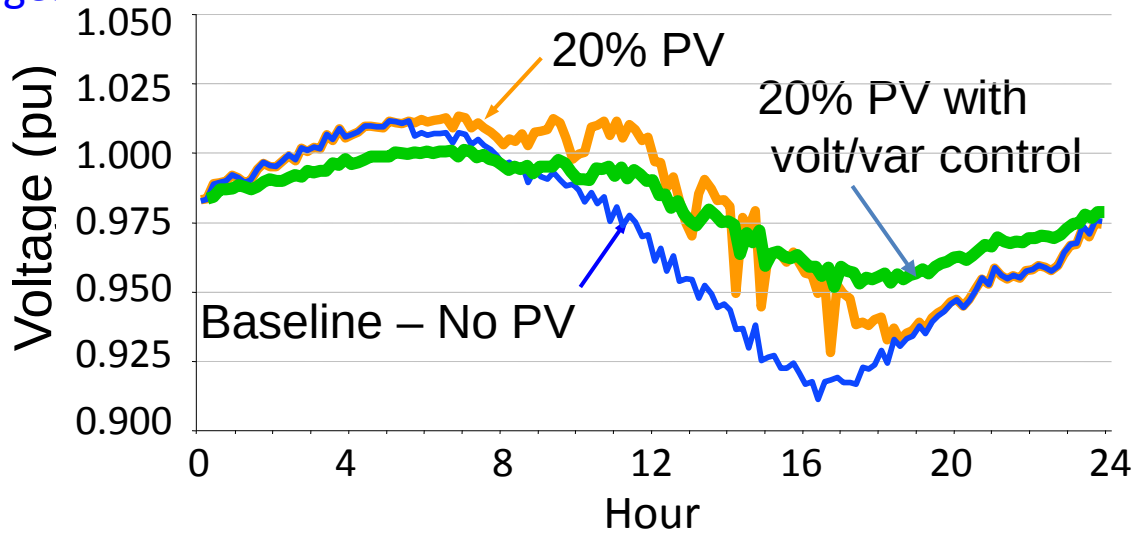

EPRI Distributed PV (DPV) Program

- **Install** 200+ monitoring systems for utility-connected PV across North America
- **Monitor** each PV system output and sunlight input at 1-s intervals for 18 months
- **Generate** datasets to help define expected PV output and to supply data for circuit analysis in OpenDSS
- **Report** results and findings from site analyses and aggregate for broader understandings

©2011 Google – Map data ©2011 Europa Technologies, Google, INEGI

DPV sites clustered Georgia and Alabama

Locations of single-panel sites installed (red) and planned (yellow)

©2011 Google – Map data ©2011 Europa Technologies, Google, INEGI

Satellite Cloud Info and Measured Irradiance

Measured in Knoxville on Aug. 4, 2010

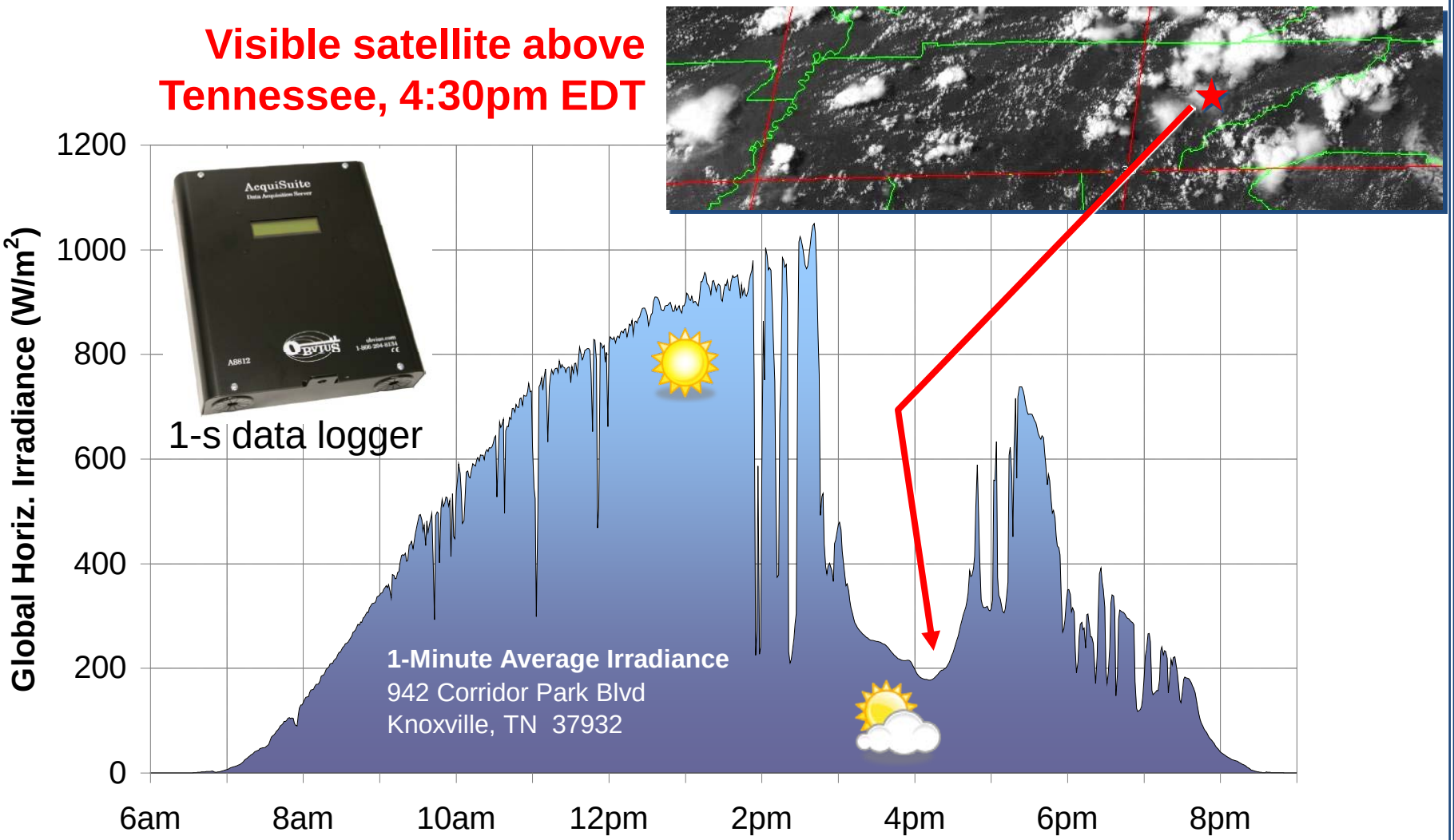

Web Dashboard Feeds Live Data for Each Array

Birmingham Airport Weather

- High: 102 F
- Low: 78 F
- Average: 90 F
- Precipitation: none
- Conditions: scattered clouds

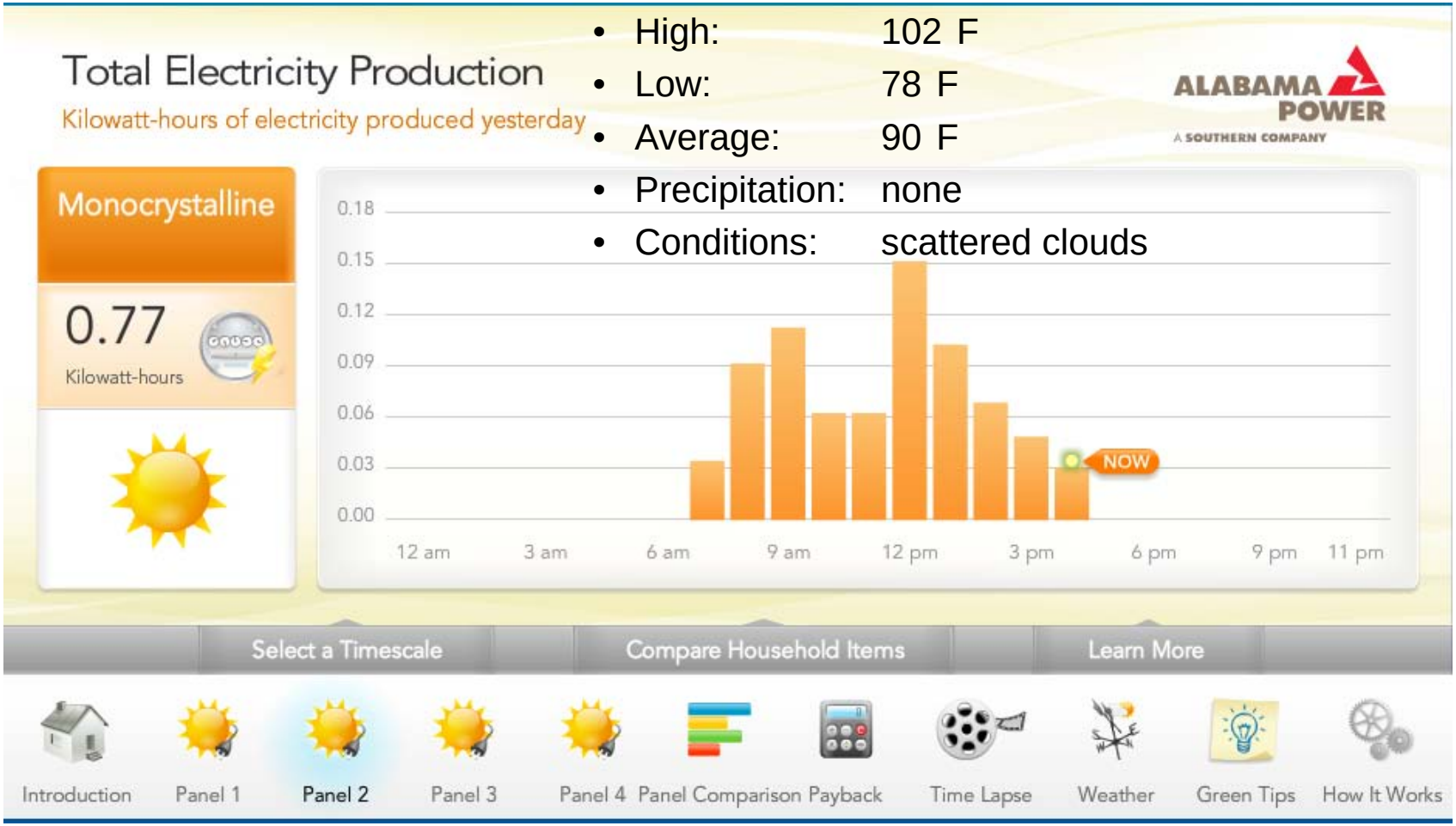

http://www.buildingdashboard.com/clients/alabamapower/

Normalized PV Array Performance with Different PV Materials

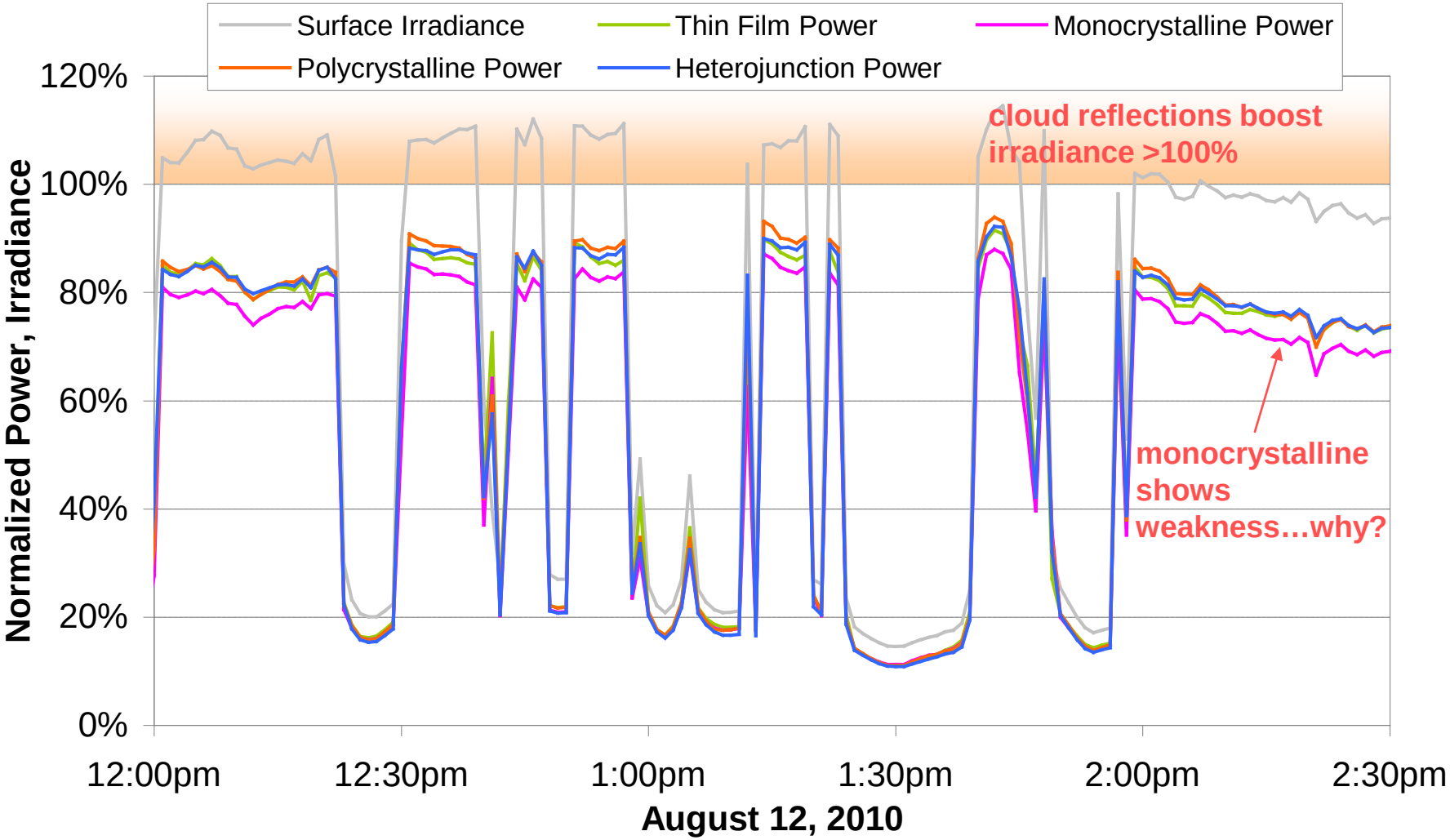

Partial List of Circuits Modeled

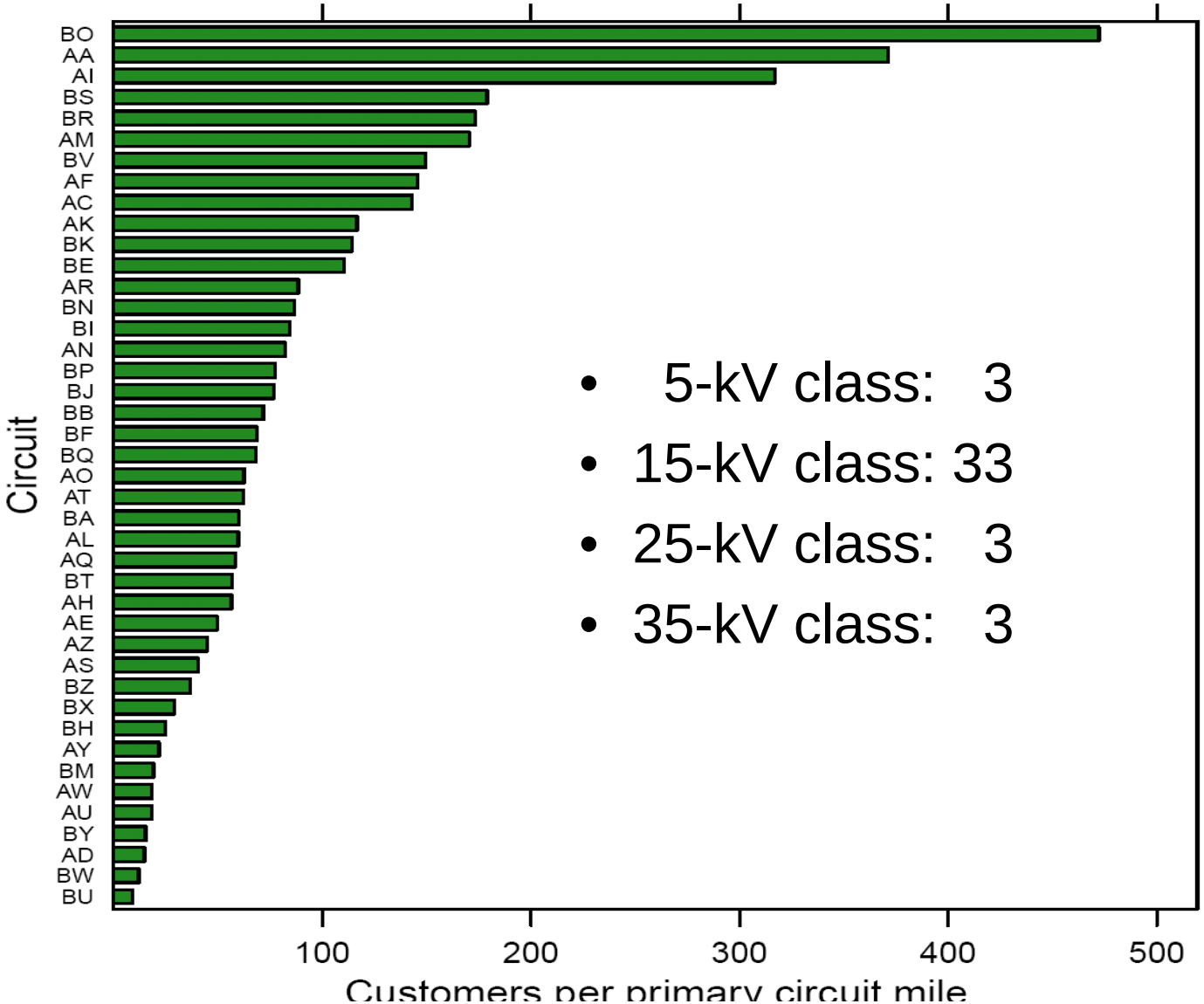

- 5-kV class: 3
- 15-kV class: 33
- 25-kV class: 3
- 35-kV class: 3

Summary of Technical Area 3 on OpenDSS Modeling

- **Solar PV-PCS system model used in OpenDSS has been verified with field measurement data.**
- **Model has been used in high penetration PV system study to show the impact with and without PV installation and with and without volt-var control.**
- **Utilization of EPRI DPV Program for OpenDSS is a tremendous asset to HiPen PV study.**

Technical Area 4: Power Quality Compliance Testing

- Grid Interconnect Test Setup at EPRI
- Abnormal Grid Voltage and Frequency Tests
- Voltage Sag and Swell Ride Tests
- Harmonic Spectra Tests
- Power Factor and Waveforms under Dark and Dusk Conditions

Grid Interconnect Test at EPRI

Grid interconnect tests:

- **Abnormal voltage**
- **Abnormal frequency**
- **Voltage sag and swell**
- **Harmonics**
- **Re-connect inrush**

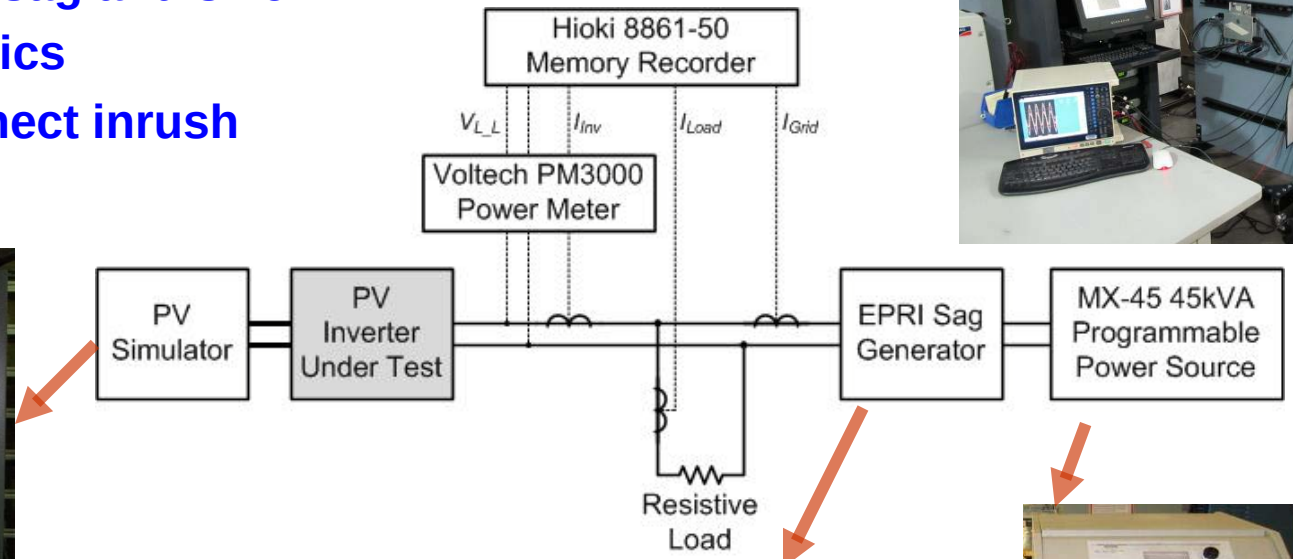

Abnormal Grid Voltage and Frequency Tests

Test Condition	Trip Magnitude (IEEE 1547-2003)	Enphase Avg. Trip Magnitude	SunnyBoy Avg. Trip Magnitude
Over Voltage (110% of V_N)	264 V	262.1 V	262.24 V
Under Voltage (88% of V_N)	211.2 V	210.82 V	211.17 V
Over Frequency	60.5 Hz	60.58 Hz	60.5 Hz
Under Frequency	59.3 Hz	59.25 Hz	59.3 Hz
Test Condition	**IEEE 1547-2003 Clearance Time (s)**	**Enphase Avg. Clearance Time (s)**	**SunnyBoy Avg. Clearance Time (s)**
Over Voltage (110% of V_N)	<1.0	0.13	0.67
Over Voltage (120% of V_N)	<0.16	0.1	0.05
Under Voltage (88% of V_N)	<2.0	1.33	1.78
Under Voltage (50% of V_N)	<0.16	0.11	0.16
Over Frequency (60.5 Hz)	<0.16	<0.016	0.11
Under Frequency (59.3 Hz)	<0.16	<0.016	0.12

- **Both inverters, within measurement errors, comply with IEEE 1547 abnormal voltage and frequency trip requirements**

Voltage Sag and Swell Reconnection

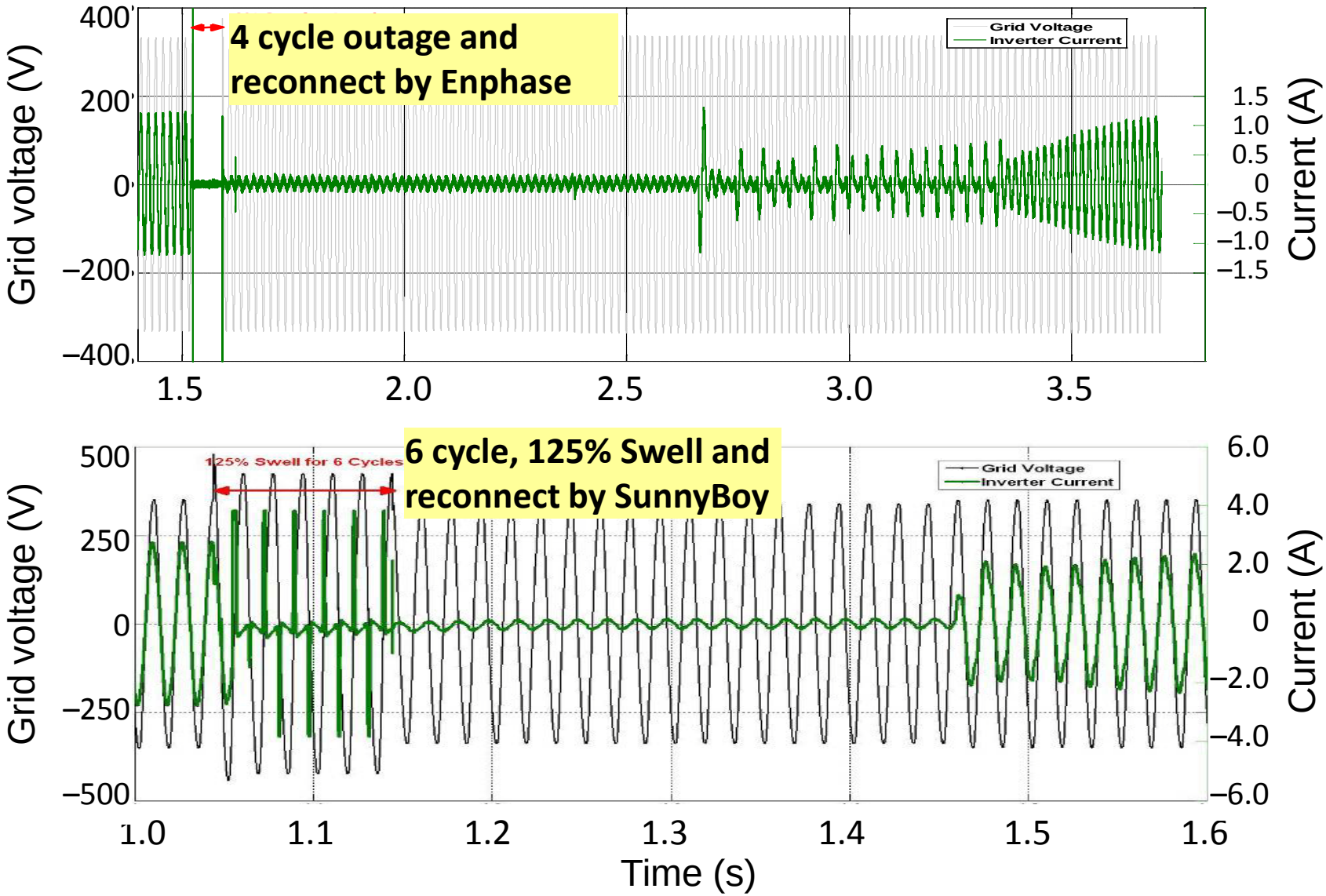

Voltage Swell and Sag Ride-Through Test Results

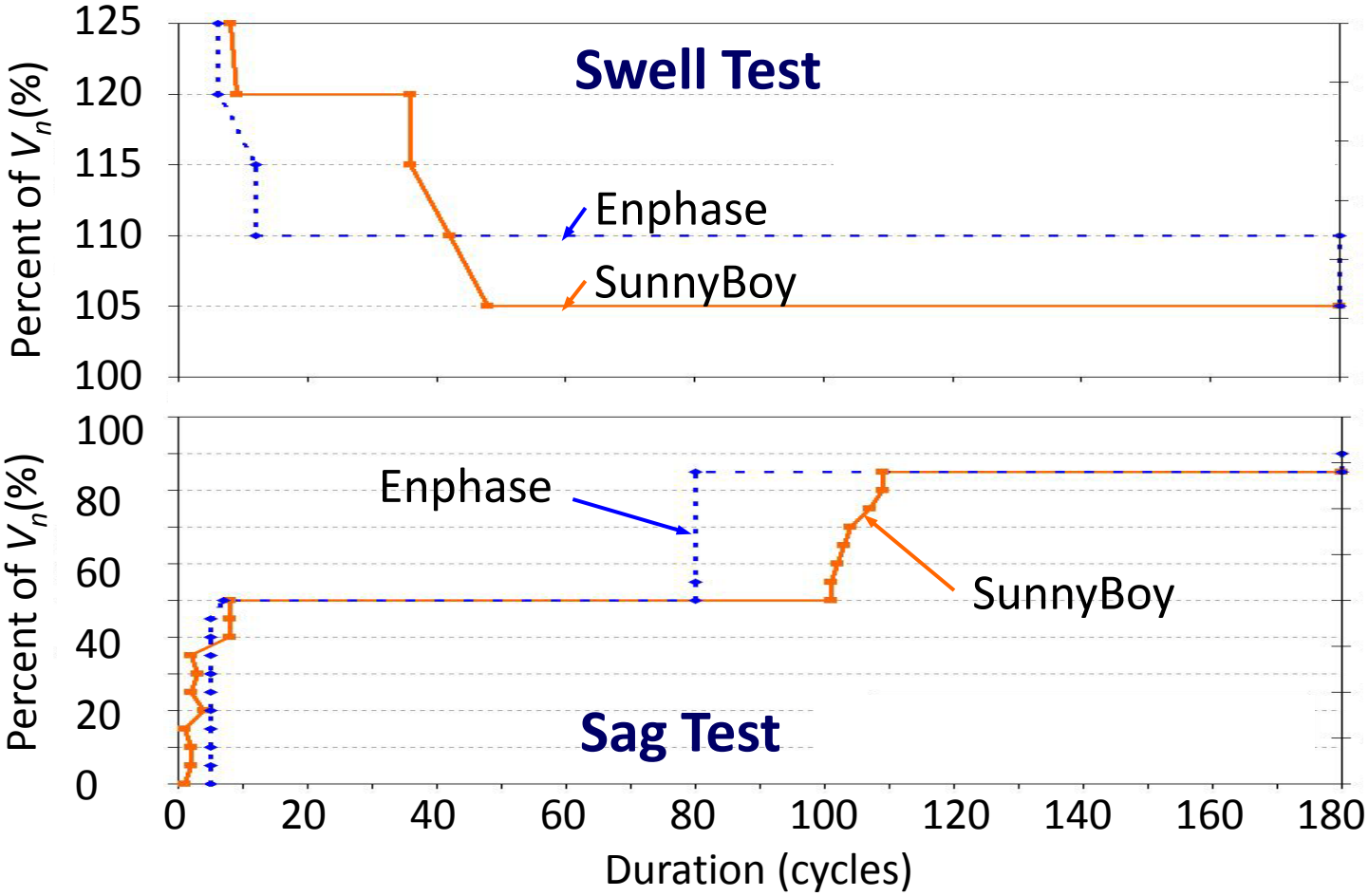

- **Enphase inverter stays on within 110% over voltage**
- **SunnyBoy inverter stays on within 106% over voltage**
- **At 85% under-voltage, both Enphase and SunnyBoy inverters stay on**
- **At 50% voltage sag, both inverters ride through more than 6 cycles**

Harmonic Spectra Test Results of Enphase Inverter at Different Loads

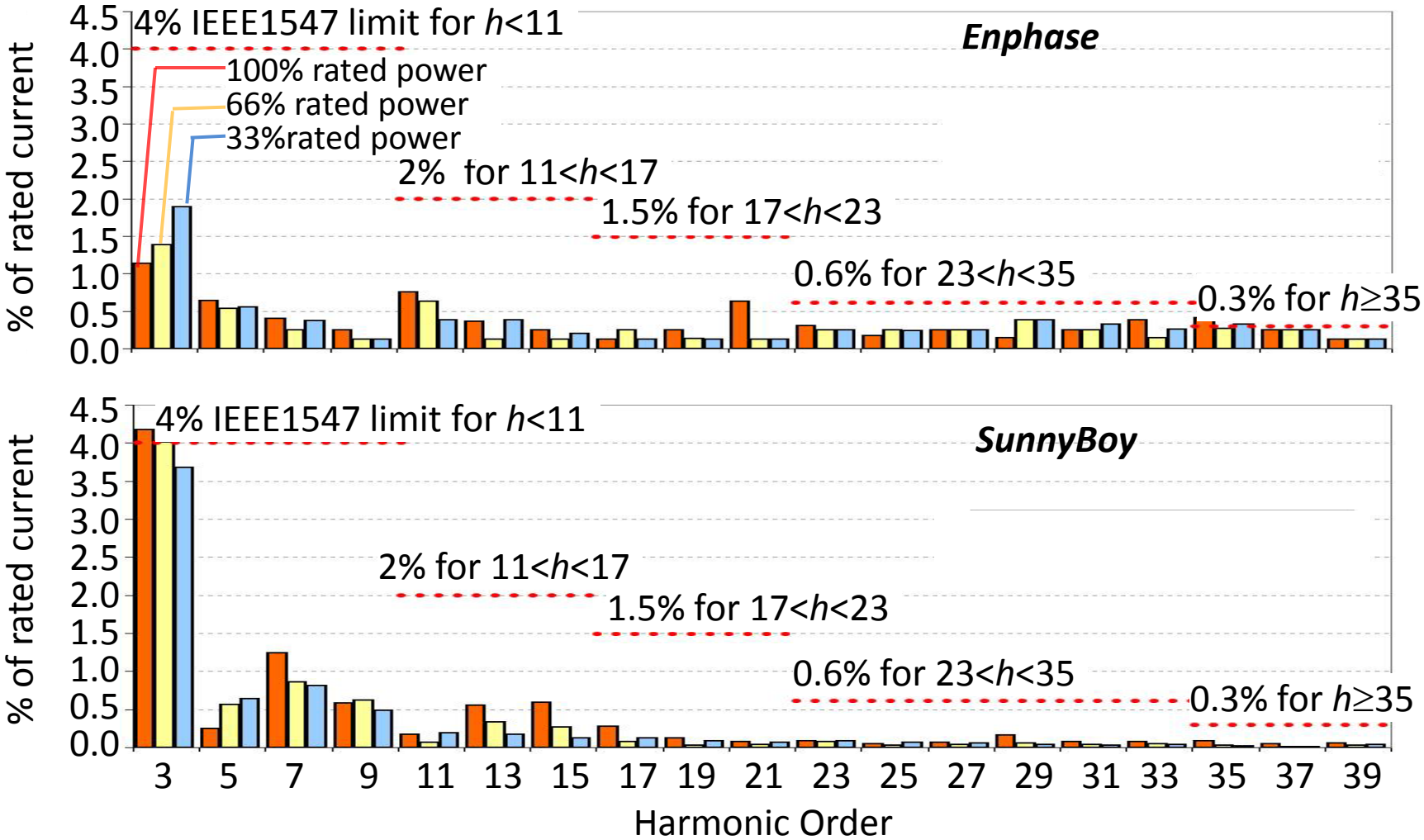

Harmonic Current Distortion at PCC

Power Level	Inverter	Voltage (V)	Current (A)	Power (W)	PF	TDD (%)
100%	Enphase	244	0.78	189	0.9952	2.00
	SunnyBoy	247	20.0	4907	0.9944	4.63
66%	Enphase	244	0.52	126	0.9905	1.87
	SunnyBoy	247	13.2	3233	0.9941	4.35
33%	Enphase	244	0.27	63	0.9645	2.31
	SunnyBoy	247	6.7	1640	0.9888	4.00

- **Both tested inverters pass 5% total demand distortion (TDD) limited in IEEE1547. Enphase inverter has superior TDD performance at 2%.**
- **For individual harmonics,**
  - **SunnyBoy inverter tends to have 3rd harmonic exceeding 4% limit, especially at higher current,**
  - **Enphase inverter tends to have high-order harmonics (>35th) exceeding 0.3% limit.**

12-kW System Power Factor and Output Power Production as a Function of Irradiance

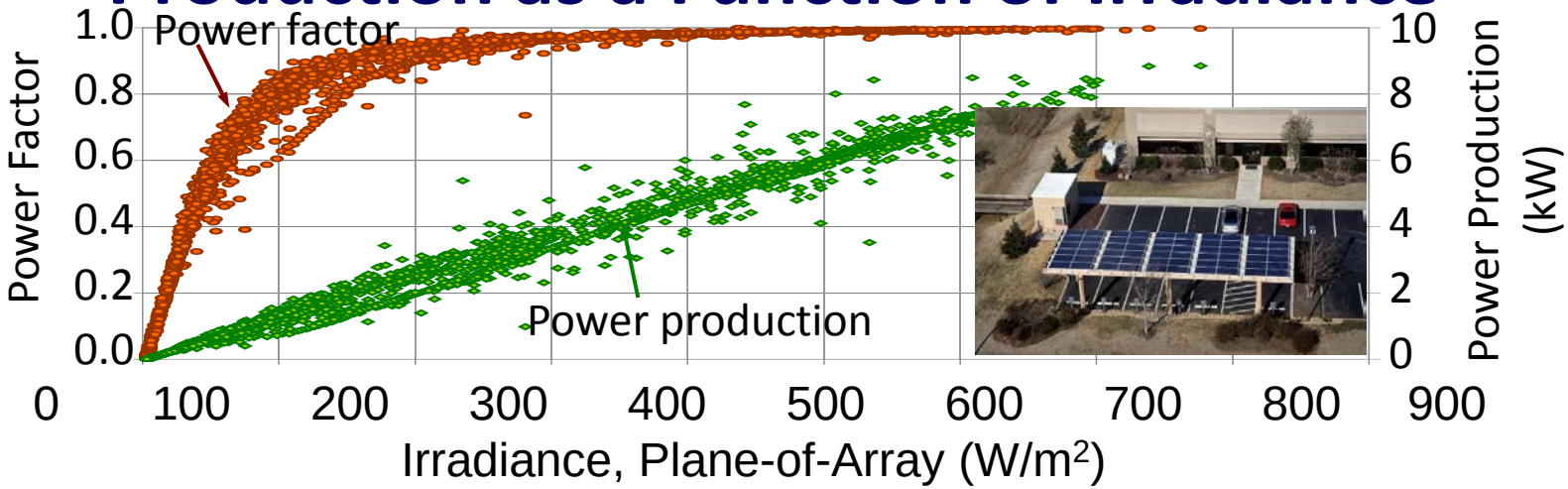

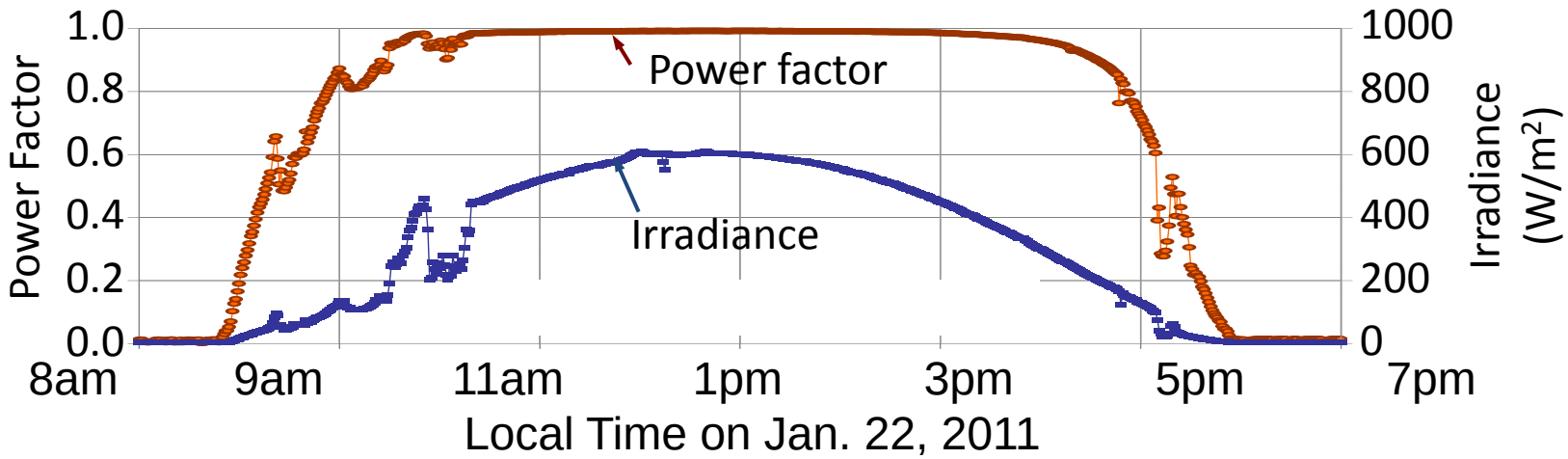

- **EPRI PV system consists of 60 pairs of PV panel and Enphase micro-inverter.**
- **Typically at 200W/m² or higher irradiance, power factor stays above 0.90.**
- **At 400W/m² or higher irradiance, power factor stays above 0.99.**

Burst Mode Operation with Enphase Inverter

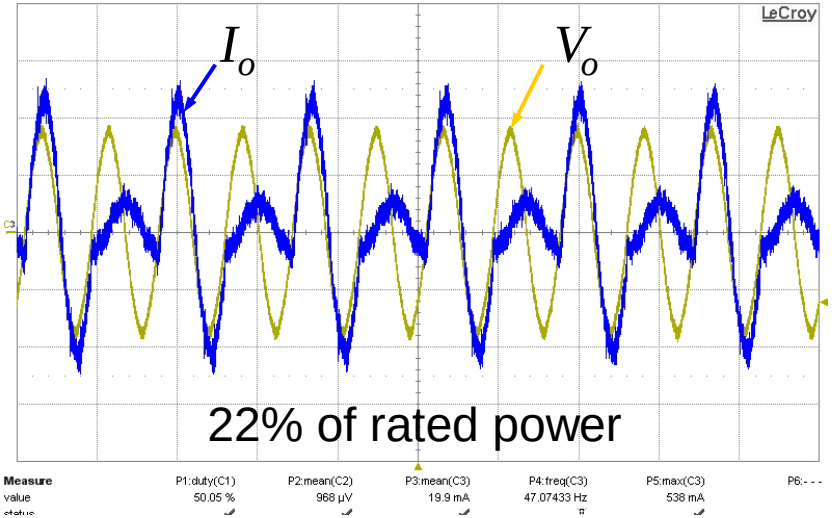

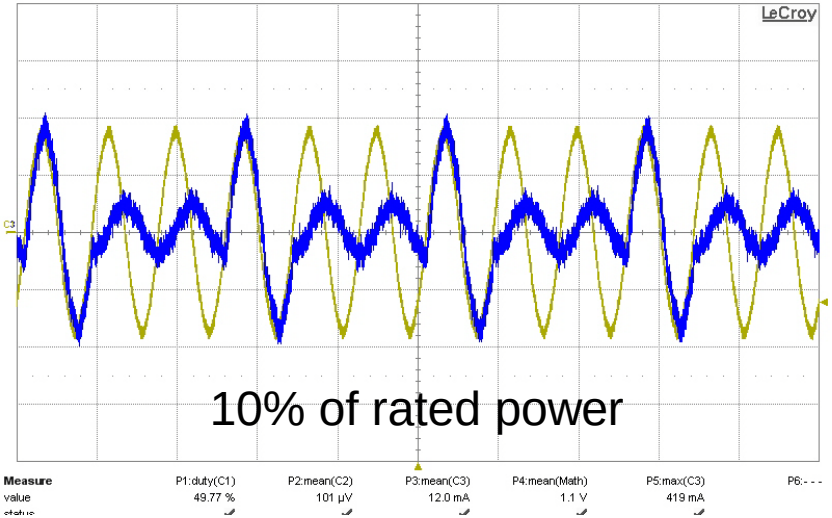

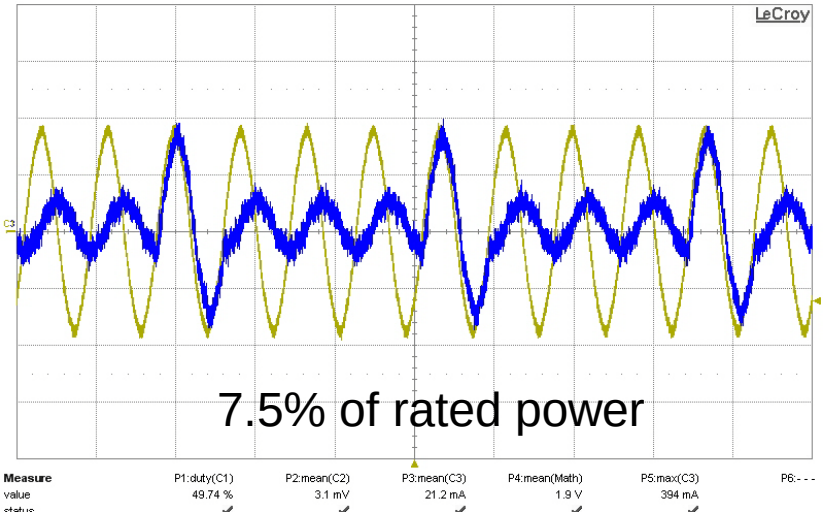

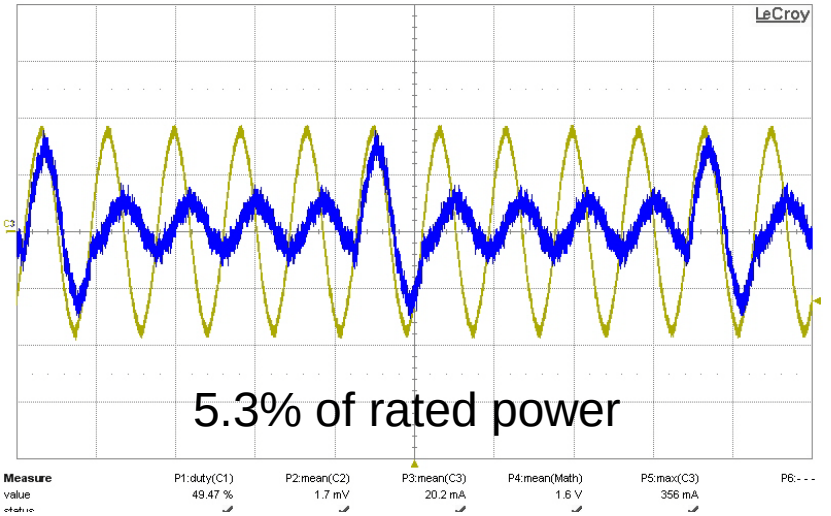

The Enphase micro-inverter runs into burst mode when the power is below 30% of rated power to increase its light load efficiency.

Large Installation Burst Mode Operations under Dark and Dusk Conditions

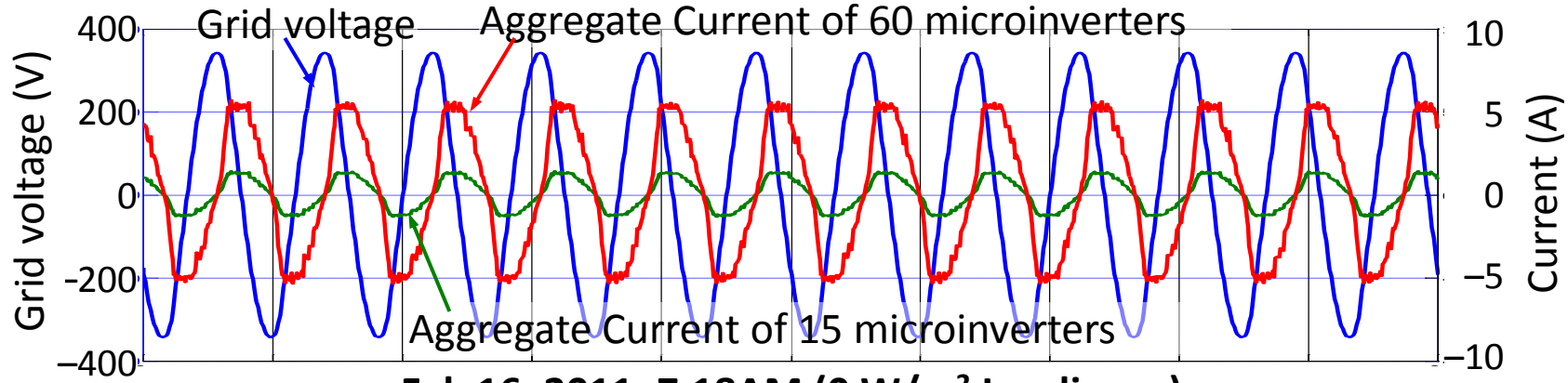

Feb 16, 2011; 7:18AM (0 W/m^2 Irradiance)

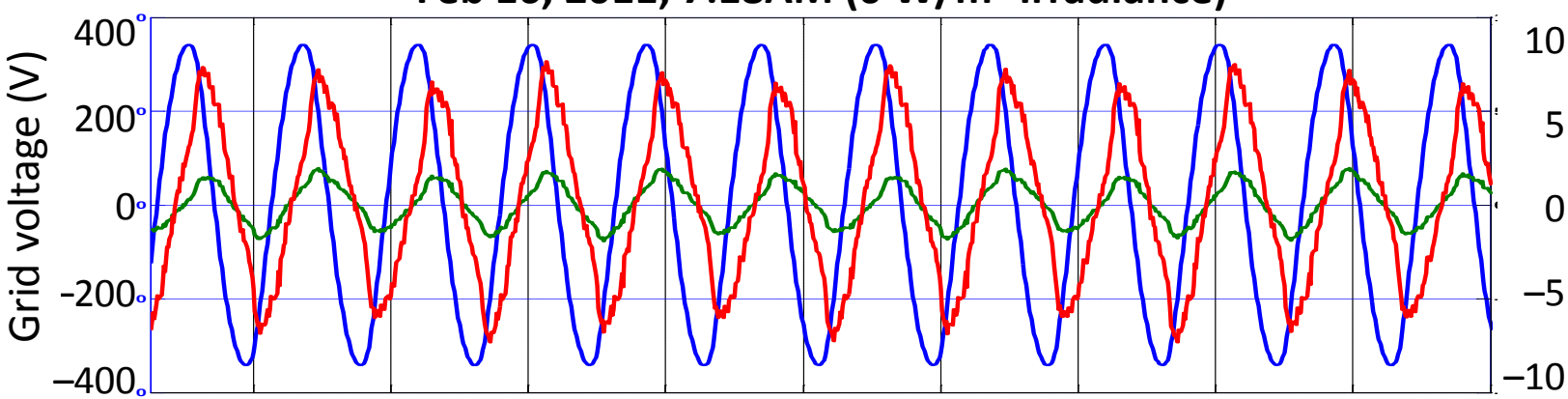

Feb 16, 2011; 8AM (37 W/m2, Total 408 W, 3.5% of rated output)

- **At dark, all Enphase inverters draw a constant leading current due to the output filter capacitor.**
- **At dusk, the aggregated current indicate that multiple burst-mode currents do not synchronize each other.**

Islanding Detection

1. **Unintentionally detecting an island by mistakes due to sensitive to the power quality problem.**
2. **Possibly running into Non-Detecting Zone (NDZ).**

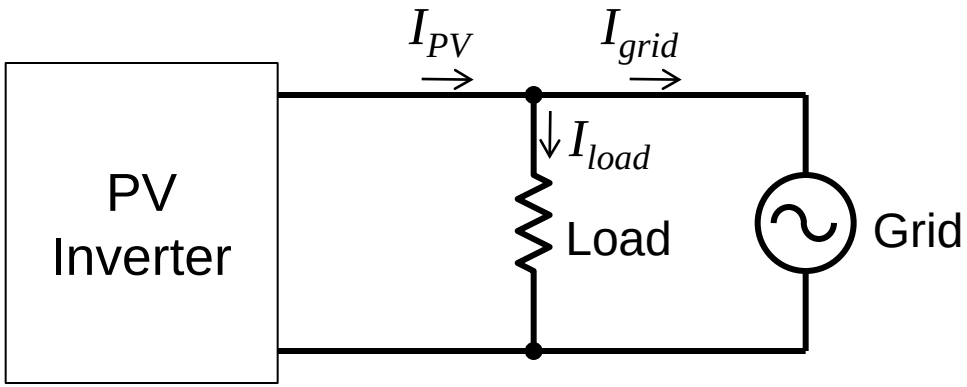

- **When the PV inverter generated power equals to the local load, i.e., $I_{PV} = I_{load}$ or $I_{grid} = 0$, the PCS runs into NDZ. In this case, PCS may not trip under islanding condition, resulting safety issues.**

Anti-islanding with Frequency Shift

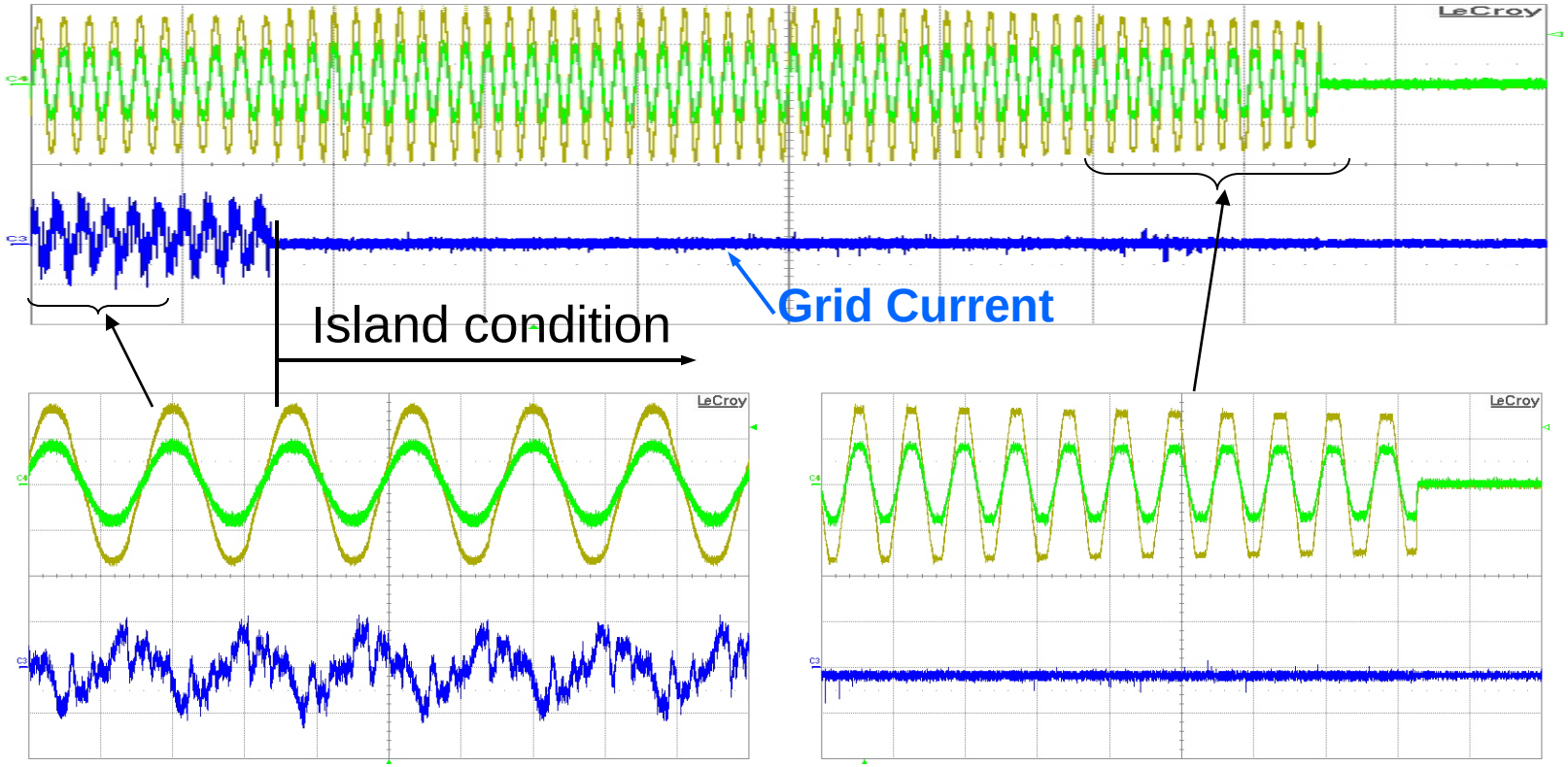

Initial condition: 60 Hz grid connected

67-Hz island condition is detected

The phase-locked loop periodically shift the frequency to 67-Hz.

- **If the grid is connected, it will return to 60 Hz with normal PLL.**
- **If the grid is disconnected, then 67-Hz frequency will be detected.**

Anti-islanding with Phase Shift

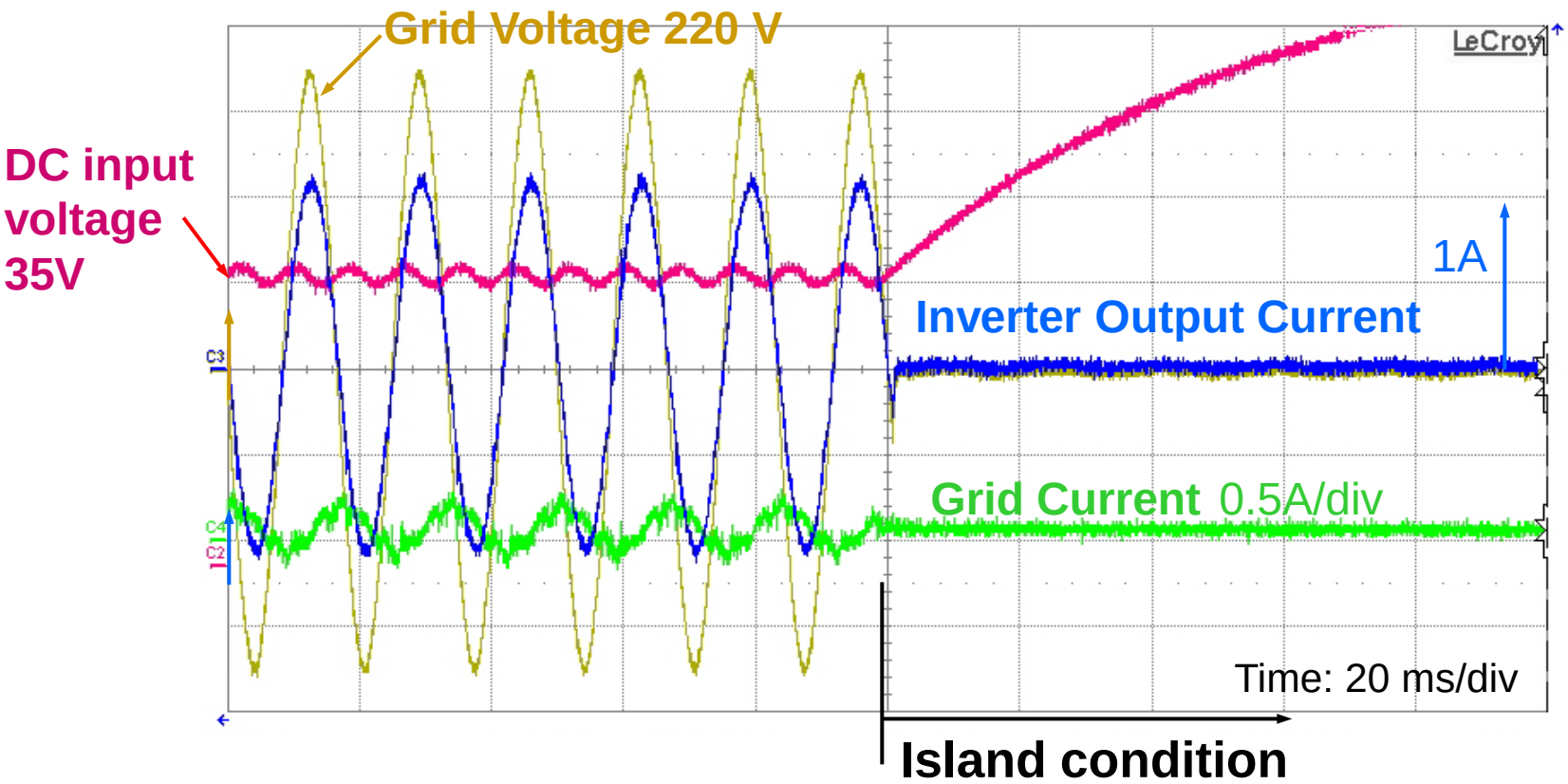

- A random phase shift to detect islanding – SunnyBoy approach.
- A 50 μs phase shift is injected every 0.5 s – Enphase approach.
- When island condition is detected, the inverter disconnects from grid immediately.

Summary of Technical Area 4 on Power Quality Testing

- Both Enphase and SunnyBoy inverters show good ride through capability under voltage sag, swell, under-voltage, and over-voltage conditions.
- Both inverters meet the TDD standard, but some individual harmonic contents exceed the standards limit.
- At dark, the Enphase inverter draws a constant leading current due to the output filter capacitor.
- At dusk, the Enphase inverter runs into burst mode, but the aggregated current of a large installation indicate that multiple burst-mode currents do not synchronize each other.
- Both Enphase and SunnyBoy inverters use phase-shift detection for anti-islanding and trip within IEEE 1547 specified 2-s time.

Real-Time Monitoring of VT-FEEC Solar House Energy and Power Production

Google powermeter
a google.org project

Google Power Meter

Recent usage
Historical usage
Take action
Settings

: SolarMagic + SunnyBoy 5000US

PowerMeter for iGoogle

You can track your recent usage right from your iGoogle home page by installing the PowerMeter iGoogle gadget.

Google™

Learn more | Dismiss

Electricity used Feb 19–Feb 20

Energy Approx. cost: $ /kW·h

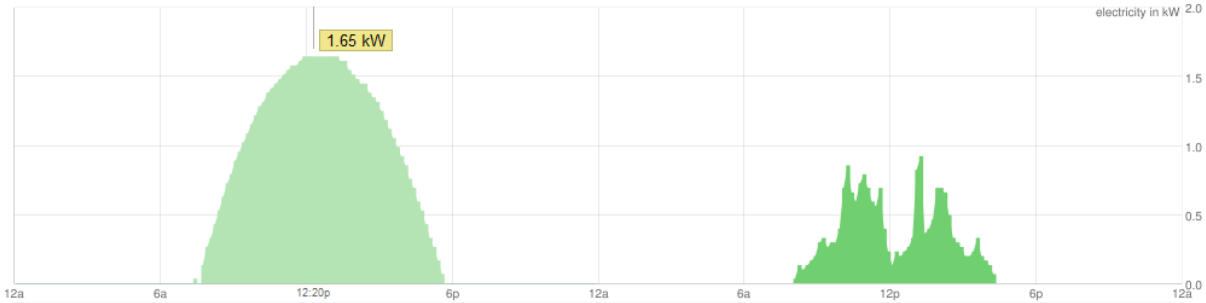

Previous day Next day

Saturday Feb 19
11 kW·h used
Always on: 0.007 kW·h used

Sunday Feb 20
3.3 kW·h used
Always on: 0.012 kW·h used

ID	Tags	Value	Units	Embeddable graphs & tools
0	SunnyBoy	1	W	3 months | 4 days | 24 hours | last hour 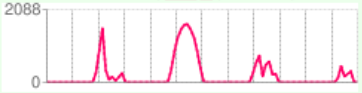 embed,history,triggers,etc
1	SolarMagic	0	W	3 months | 4 days | 24 hours | last hour 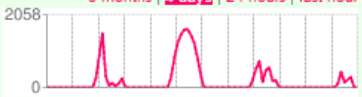 embed,history,triggers,etc
2	Enphase	0	W	3 months | 4 days | 24 hours | last hour 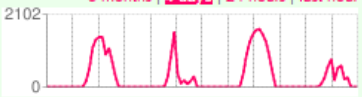 embed,history,triggers,etc

Displaying **all 3** datastreams

Pachube online database service

Q &A

Contact Info: Jason Lai, Virginia Tech
540-231-4741
laijs@vt.edu
www.feec.ece.vt.edu

Tom Key, EPRI
865-218-8082
tkey@epri.com
www.epri.com

ELECTRIC POWER RESEARCH INSTITUTE

TOGETHER…SHAPING THE FUTURE OF ELECTRICITY